Software Manual

VEDA MC

VF-400 DCDC Converter



drives.ru

Preface

Thank you for purchasing VF-400 series engineering multi-motor AC drive designed and manufactured by our company.

VF-400 series is a common DC bus high-performance multi-motor AC drive with modular design. Composed of the rectifier module and the inverter module, VF-400 series features compact structure, high power density, fast response speed and high control accuracy, as well as the advantages of convenient cabinet setup and maintenance. The energy feedback function on it greatly improves the energy utilization rate, so it is widely used in scenarios such as metallurgy, petroleum, papermaking, harbor lifting, shipping, testing, and power supply.

VEDA MC reserves the right to continuously improve the product, and at the same time update the content in the corresponding manual, on which, VEDA MC also has the final interpretation right.

If there are doubts about some functions and performance, please consult our technical staff.

Catalog

Term 5
Chapter 1 Safety Precaution 6
1.1 Security Description 6
1.2 Warnings and Signs 6
1.3 Security Guidelines 6
Chapter 2 System Introduction 7
2.1 Operating Modes 7
2.1.1 Voltage Mode 7
2.1.2 Current Mode 7
2.2 Detection 8
2.2.1 Detection Description 8
2.2.2 Detection Setting 8
2.3 VF-400-CINU+DCDC Control Module Operation Guidelines 12
2.3.1 Indicator Description 12
2.3.2 Peripheral Terminals and Parameter Setting Description 13
2.3.3 VF-400-CINU+DCDC Expansion Module and Description 13
Chapter 3 Debugging Tool 14
3.1 VF-400-PAN-G Intelligent Keyboard 14
3.1.1 General Layout 14
3.1.2 Keyboard and Display 15
3.1.3 Trunking to PC 16
3.2 VCACSoft Debugging Software 17
3.2.1 Software Installation 17
3.2.2 Main Interface 17
3.2.3 Create A New Project 18
3.2.4 Basic Function 20
3.2.5 Waveform Record and Analysis 21
Chapter 4 Quick Debugging Guide 26
4.1 Hardware Wiring Checking 27
4.2 Factory Reset 27
4.3 Power Module Checking and Setting 28
4.3.1 Equipment Information Checking 28
4.3.2 Detection Parameter Setting 28
4.4 Parameter Setting 30

4.4.1 Operating Mode Setting 30
4.4.2 Voltage or Current Settings 30
4.5 Trial Operation 30
4.5.1 Start via Upper PC/Keyboard 30
4.5.2 Start via Keyboard Number Entering and Analog Input 30
Chapter 5 Function Module Description 31
5.1 Channel Setting 31
5.1.1 Voltage setting 31
5.1.2 Current Setting 31
5.1.3 Range Setting 32
5.2 Application Function 33
5.2.1 HV-Side Voltage Regulator 33
5.2.2 Positive Current Limit Curve 34
5.2.3 Overvoltage and Undervoltage Protection on the LV Side 35
5.3 Terminal Start/Stop 36
5.3.1 Terminal Start/Stop Mode 1 36
5.3.2 Terminal Start/Stop Mode 2 36
5.3.3 Terminal Start/Stop Mode 3 36
5.3.4 Terminal Start/Stop Mode 4 37
5.4 AIO, DIO, and HIO Parameter Setting 37
5.4.1 DI 38
5.4.2 DO 38
5.4.3 AI 38
5.4.4 AO 40
5.4.5 HDI 42
5.4.6 HDO 42
5.4.7 VF-400-BX 42
Chapter 6 Parameter and Function Code 46
6.1 Parameter List 46
6.1.1 Group F00: Environmental Applications 46
6.1.2 Group F05: Input Terminal 47
6.1.3 Group F06: Output Terminal 50
6.1.4 Group F10: Protection Parameters 54
6.1.5 Group F12: Communication Parameters 58
6.1.6 Group F19: DI Physical Action Parameter 61

6.1.7 Group F27: DCDC Parameters 63
6.1.8 Group F29: Fault Monitoring Parameters 66
6.1.9 Group E00: Parallel Parameters 66
6.1.10 Group E04: IO Module 1 Parameters 66
6.1.11 Group E05: IO Module 2 Parameters 69
6.1.12 Group E06: IO Module 3 Parameters 69
6.1.13 Group E07: VF-400-DCDT 2 Card Parameters 69
6.1.14 Group E10: Black Box Module 69
6.1.15 Group C0x: Monitoring Parameters 70
6.2 Terminal I/O Function Selection 74
Chapter 7 Troubleshooting 76
7.1 Fault Viewing 76
7.1.1 Fault Classification 76
7.1.2 Fault Message Viewing 76
7.1.3 Fault Reset 78
7.2 External Fault Customization 78
7.3 Fault List 78

Term

Term	Description
VF-400-ACDT	AC Synchronized Voltage Detection Module
VF-400-DCDT	DC Voltage Detection Module
AI	Analog Input
AO	Analog Output
DI	Digital Input
DO	Digital Output
RO	Relay Output
HDI	High-speed Digital Input
HDO	High-speed Digital Output

Chapter 1 Safety Precaution

Before commissioning and operating the product, please read this manual carefully and strictly follow all safety precautions in this manual. VEDA MC will not take on any legal responsibility for personal safety accidents, property damage caused by unauthorized operation of the product.

1.1 Security Description

- **Safety level**
  - **DANGER:** Failure to comply with the relevant safety rules may result in serious personal accidents or even death.
  - **WARNING:** Failure to comply with the relevant safety rules may result in personal injuries or abnormalities or damages to the equipment.
  - **CAUTION:** Matters or procedures need to be observed for normal running of the equipment.
- **Operator**

  This product must be installed, wired, operated and maintained by trained professionals. "Trained professionals" means that the personnel working on this product must be trained with specialized skills and knowledge about installation, wiring, operation and maintenance of the equipment, so they can respond correctly to various emergencies that arise during use.

1.2 Warnings and Signs

The following signs are used in this manual to highlight the safety key points. Failure to observe these points may result in damages to this product and the associated system, or even personal injuries.

Sign	Name	Description
	Danger	**DANGER:** incorrect operation may result in death or major safety incidents
	Warning	**WARNING:** incorrect operation may result in personal injuries or abnormalities or damage to the equipment.
	Caution	**CAUTION:** incorrect operation may result in minor injuries
Note	Note	**NOTE:** incorrect operation may result in damage to the product and the associated system

1.3 Security Guidelines

The safety rules and warning signs presented for safety are measures taken to prevent personal injuries and damages to the product and the associated system. Please read this manual carefully before use and strictly follow the safety guidelines and warning signs in this manual.

Chapter 2 System Introduction

2.1 Operating Modes

The operating modes of VF-400-DCDC chopper module include voltage mode and current mode. Users can select the voltage mode or current mode by function code F27.00 [Operation mode].

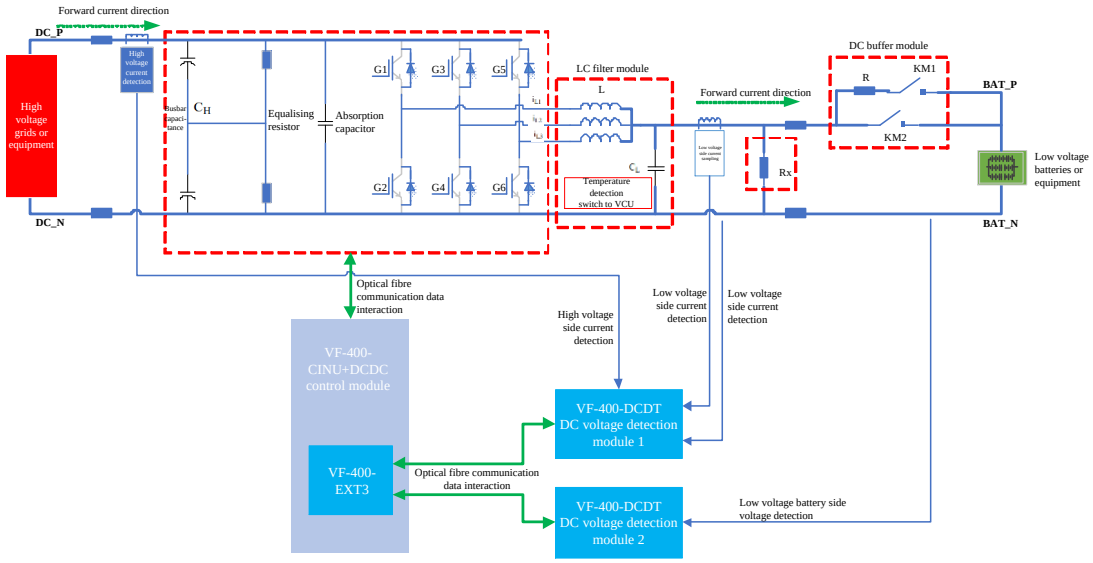

Figure 2-1 Basic topology of VF-400-DCDC chopper module

Note:

- Due to the topological characteristics of the DC chopper unit, the DC input voltage of it is inevitably higher than the DC output voltage, and therefore the DC input is defined as the high voltage side (HV side) and the DC output as the low voltage side (LV side).
- The DC chopper unit adopts a four-quadrant DC-DC system, which needs to specify the direction of positive and negative currents when users give a current command, and therefore the current flowing from the HV side to the LV side is defined as positive and the current flowing from the LV side to the HV side is defined as negative.

2.1.1 Voltage Mode

When the DC chopper unit operate in the voltage mode, set either the LV-side voltage or the HV-side voltage of the device to the target value so it can provide a programmable DC voltage source for the back-end load within the rated power range.

The voltage mode can be categorized as controlling the LV-side voltage or the HV-side voltage.

- The LV-side voltage setting

If F27.02 [Operation mode] is set to 0 [Voltage mode] and F27.00 [Voltage mode selection] is set to 0 [LV side], the DC chopper unit can control the LV-side voltage within the set range.

The LV-side voltage can be set via group F27.

- The HV-side voltage setting

If F27.00 [Operation mode] is set to 0 [Voltage mode] and F27.02 [Voltage mode selection] is set to 1 [HV side], the DC chopper unit can control the HV-side voltage within the set range.

The HV-side voltage can be set via group F27.

2.1.2 Current Mode

When the DC chopper unit operate in the current mode, set the LV-side voltage or the HV-side voltage to a target value so it can provide a programmable DC voltage source for the back-end load within the rated power range.

Set F27.00 [Operation mode] to 1 [Current mode] and the DC chopper module will operate in current mode.

The current can be set via group F27. If the parameter is set to a positive number, the DC chopper module charges the LV side and discharges the HV side at the same time; if it is set to a negative number, the DC chopper module discharges the LV side and charges the HV side at the same time.

2.2 Detection

2.2.1 Detection Description

In a DC chopper unit, the system topology is shown below.

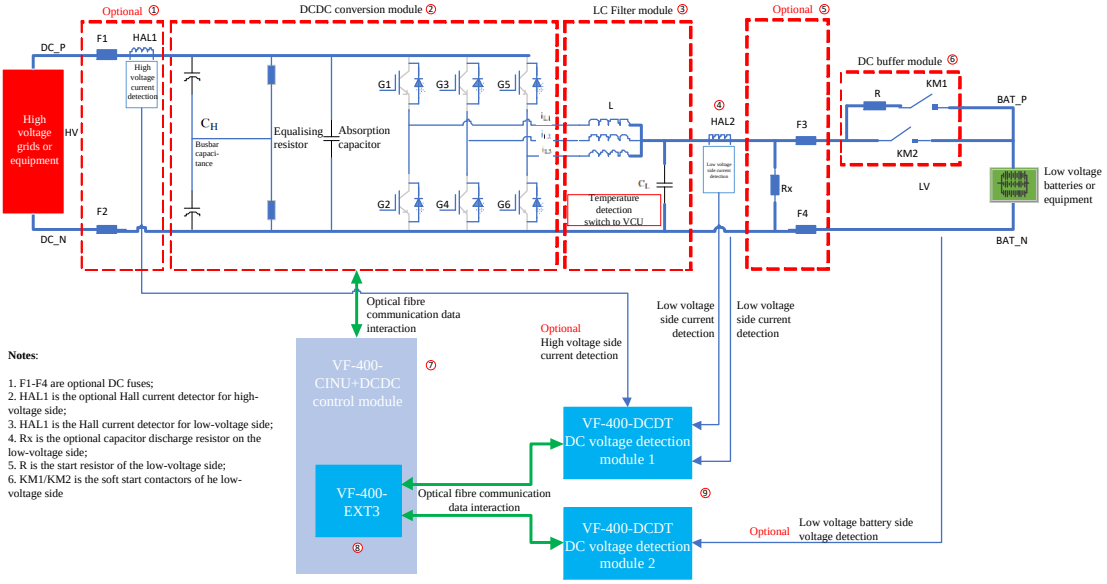

Figure 2-2 DC chopper device system topology diagram

In the DC chopper device system, the input and output voltage and current of the system need to be sampled and detected as follows:

- LV-side voltage detection: the voltage detection at position④ in the above figure is used for LV side voltage closed-loop control and LV side protection. LV-side voltage must be detected and sampled.
- LV-side snubber start voltage detection: the voltage detection at position⑥ is used for the snubber process on the LV side see if the snubber circuit is completed, so please do detect the voltage on both sides when the LV side is equipped with a snubber circuit.
- LV-side positive current detection: the current detection in position④ is used for the current forward function of the LV-side voltage closed-loop control to improve the response speed when the load dynamically changes. Please detect the low-side positive current when it is under the voltage mode (LV side).
- HV-side positive current detection: the current detection in position① is used for the current forward function of the HV-side voltage closed-loop control to improve the response speed of the LV-side voltage when the load dynamically changes. Please detect the
- high-side positive current when it is under the voltage mode (HV side).

2.2.2 Detection Setting

In the DC chopper device, I/O voltage and current of the system is detected via the VF-400-DCDT synchronous voltage module, which will further transmit the signal to the VF-400-CINU+DCDC control module for processing via fiber optics to control the voltage and current and protect the system.

Set the detection-related function codes reasonably according to the actual situation where the DC chopper module is used. Please refer to the configuration sequence in the following figure.

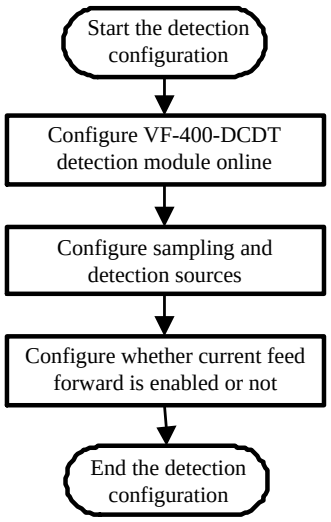

Figure 2-3 DC chopper device system topology diagram

● Configure VF-400-DCDT synchronous voltage and current detection module

The VF-400-DCDT synchronous voltage and current detection module can detect 1-channel DC voltage and 2-channel DC current. The DC chopper unit needs to use one or more sets of VF-400-DCDT modules for DC I/O voltage and current detection.

The VF-400-DCDT synchronous voltage and current detection module must be correctly set up before the DC chopper module starts. Incorrect settings or disconnection of the VF-400-DCDT module will trigger corresponding fault warnings.

The VF-400-CINU+DCDC controller supports the simultaneous use of up to three sets of VF-400-DCDT modules, which can be configured separately in the E7 group. The configuration steps are as follows:

1. Check the actual expansion slot location of the VF-400-DCDT module in C08.13-C08.31.
2. If the VF-400-DCDT module is shown in C08.13-C08.31, set E07.00 to the appropriate expansion slot.

Note:

If the VF-400-DCDT module is not shown in C08.13-C08.31, users need to check if the VF-400-DCDT module is connected or powered.

The function codes related to the synchronous voltage and current detection module are listed in the table below:

Table 2-1 VF-400-DCDT module-related codes

Code	Name	Description
E07.00	VF-400-DCDT 1 slot selection	Expansion slot is set according to the actual installation location of the module
E07.10	VF-400-DCDT 2 slot selection	Expansion slot is set according to the actual installation location of the module
E07.20	VF-400-DCDT 3 slot selection	Expansion slot is set according to the actual installation location of the module

● Configure the detection sources for detection

As shown in Figure 2-4, the four detection points in the DC chopper unit topology are detected by the VF-400-DCDT synchronous voltage detection module, so it is necessary to configure each detection source OFF/ON, as well as the corresponding VF-400-DCDT module and detection channel on VF-400-CINU+DCDC module.

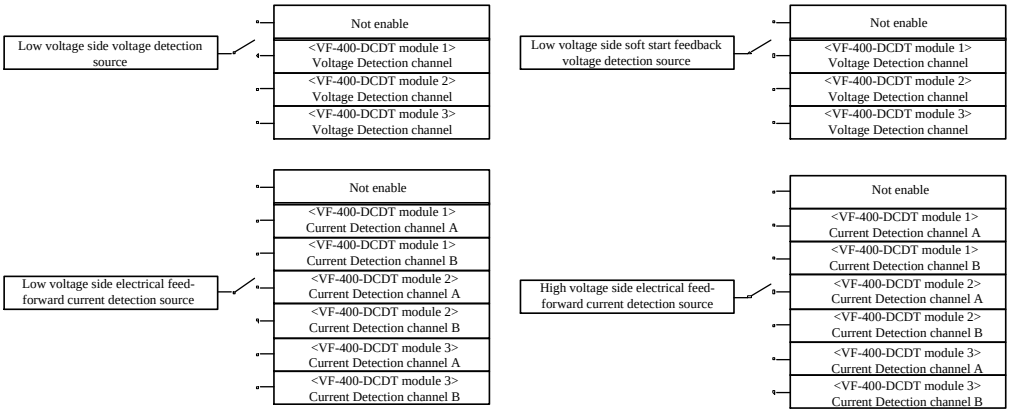

Figure 2-4 DC chopper detection source setting

The VF-400-CINU+DCDC provides two configuration methods:

- Set F27.42 [Detection configuration method] to 0 [Customized configuration], and then manually set each detection source via F27.43/F27.44/F27.45/F27.50.
- Set F27.42 [Detection configuration method] to the given method 1~3 via F27.43~F27.45 for auto configuration, and then set F27.50 manually.

The function codes related to the detection source settings for detection are as follows:

Table 2-2 Relevant function codes description

Code	Name	Description
F27.42	Detection configuration	1. For F27.42=0 [Customized configuration], configure manually according to the actual detection wiring: F27.43~F27.45/F27.50 2. For other configuration methods, F27.43~F27.45 are given and not available for modification 3. For F27.42=1 [Configuration 1] The LV-side voltage source is the voltage detection of VF-400-DCDT module 1 The LV-side positive current source is the channel A current detection of the VF-400-DCDT module 1 The HV-side positive current source is the channel B current detection of the VF-400-DCDT module 1 4. For F27.42= 2 [Configuration 2] The low-side voltage source is the voltage detection of VF-400-DCDT module 1 The LV-side positive current source is the channel A current detection of the VF-400-DCDT module 1 The HV-side positive current source is not enabled. 5. For F27.42=3 [Configuration 3] The low-side voltage detection source is the voltage detection of VF-400-DCDT module 1 The LV-side positive current source is not enabled The HV-side positive current source is not enabled
F27.43	LV-side voltage source selection	Configure the detection source for LV-side voltage detection in accordance with the actual wiring (F27.43 can be freely configured only if F27.42 = 0 [Customized configuration])

F27.44	LV-side positive current source selection	Configure the detection source for LV-side positive current detection according to the actual wiring (F27.44 can be freely configured only if F27.42=0 [Customized configuration]). When the actual wiring is not configured with LV-side positive current detection halls, please set F27.44=0 [Not enabled]
F27.45	HV-side positive current source selection	Configure the detection source for positive current detection on the HV side according to the actual wiring (F27.45 can be freely configured only if F27.42=0 [Customized configuration]). When the actual wiring is not configured with HV-side positive current detection halls, please set F27.45=0 [Not enabled]
F27.50	LV-side snubber start feedback voltage source selection	Configure the detection source of low-side snubber start feedback voltage detection according to the actual wiring. If the actual wiring is not configured for low-side snubber feedback voltage detection, please configure F27.50=0 [Not enabled]

- Configure the current forward function

  The LV-side current feedforward and HV-side current feedforward are on by default on the VF-400-CINU+DCDC controller. If there is no LV-side or HV-side current feedforward configured, please disable the corresponding current feedforward functions, its codes are shown as follows:

Table 2-3 Function codes description

Code	Name	Content
F27.07	LV-side current forward enable	If the LV-side positive current detection source is selected as F27.44=0 [Not enabled], please disable LV-side current forward function, set F27.07=0 [Not enabled]
F27.08	HV-side current forward enable	If the HV-side positive current detection source s selected as F27.45=0 [Not enabled], please disable the HV-side current forward function, set F27.08=0 [Not enabled]

2.3 VF-400-CINU+DCDC Control Module Operation Guidelines

2.3.1 Indicator Description

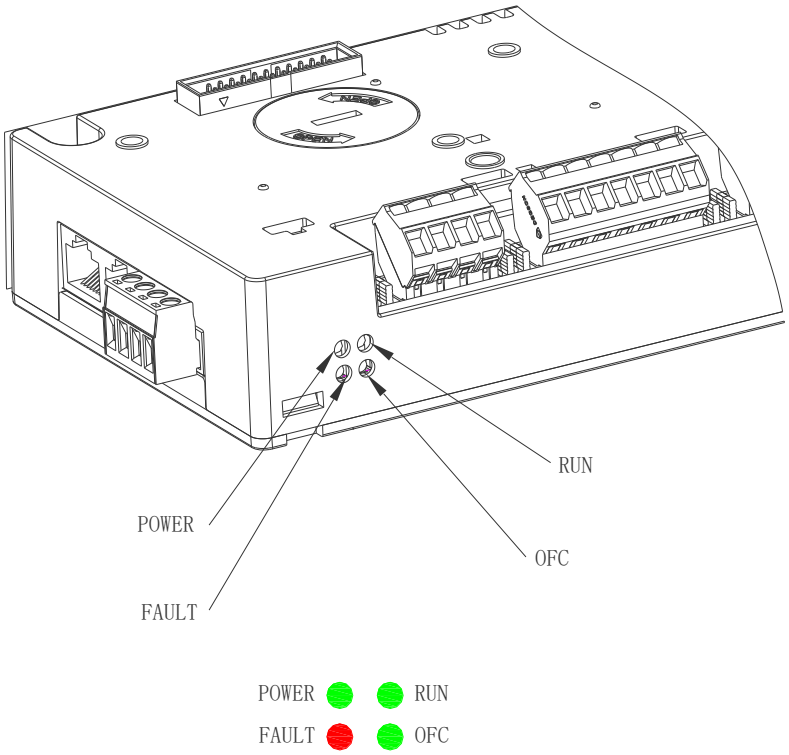

Figure 2-5 VF-400-CINU+DCDC indicator position

Table 2-4 VF-400-CINU+DCDC indicator definitions

No.	Name	Description
1	POWER	Green indicator on: normal power supply Green indicator off: no power or abnormal power supply
2	RUN	Green indicator on: normal running Green indicator off: shut down
3	FAULT	Red light on: fault Red light off: no fault
4	OFC	Flashing/2.56s: communication disconnected Flashing/1.28s: normal communication Flashing/0.25s: abnormal communication

2.3.2 Peripheral Terminals and Parameter Setting Description

Please refer to VF-400-CINU Control Module Manual for VF-400-CINU+DCDC standard peripheral terminal details, and this manual only introduces the ports and the corresponding parameter groups, as shown in the table below:

Table 2-5 Port description

Name	Code	Description
RS485	F12	Set communication rate and communication address
DI	F05, F19	View DI status and turn-on/off-delay settings
RO	F06, F19	Select output source
AI	F05	The results are shown in group C10
AO	F05	Select output source
HDI	F05, F19	High-speed DI settings
HDO	F06, F19	High-speed DO settings

2.3.3 VF-400-CINU+DCDC Expansion Module and Description

Please refer to the corresponding manual of each module for the expansion hardware module. There are 3 steps to use the expansion modules:

1. Confirm the module type.
2. Select the slot where the module is located. For I/O module or encoder detection module, it supports up to 3 pieces at the same time, and users need to configure each module separately.

Table 2-6 Module description

Model	Name	Type	Code
VF-400-B4	Digital-analog expansion	I/O module	E04/E05/E06
VF-400-DCDT	DC synchronized voltage detection	Voltage detection module	-
VF-400-EXT1/2/3	Fiber optic expansion	Fiber optic expansion module	-
VF-400-C2	Modbus RTU fieldbus	Fieldbus module	F12

3. Check the current expansion module type and software version via the C08 group function code.

Table 2-7 C08 group function code related parameter

Slot	Module type	Software version	Slot	Module type	Software version
SLOT_A1	C08.13	C08.14	SLOT_B1	C08.19	C08.20
SLOT_A2	C08.15	C08.16	SLOT_B2	C08.21	C08.22
SLOT_A3	C08.17	C08.18	SLOT_B3	C08.23	C08.24
SLOT_C1	C08.25	C08.26	FDDI	C08.31	C08.32
SLOT_C2	C08.27	C08.28	-	-	-
SLOT_C3	C08.29	C08.30	-	-	-

Chapter 3 Debugging Tool

Parameter setting and debugging can be done via the VF-400-PAN-G intelligent keyboard and VCACSoft debugging software on the VF-400 series products currently, and the debugging steps and related function codes are basically the same. This chapter mainly introduces VF-400-PAN-G intelligent keyboard and VCACSoft debugging software.

3.1 VF-400-PAN-G Intelligent Keyboard

VF-400-PAN-G intelligent keyboard features wide power supply range, LCD display, etc. It supports functions like parameter setting, status monitoring, parameter copying, fault analysis, program downloading, and USB relay/mass storage.

3.1.1 General Layout



Figure 3- 1 General layout

3.1.2 Keyboard and Display

Key description



Figure 3- 2 Key description

Table 3- 1 Key names and functions

Key	Name	Description
F1	Function 1	Back to the parent directory (different functions on different interfaces)
F2	Function 2	Main menu/Monitor/Edit/Delete (different functions on different interfaces)
F3	Function 3	Go to the subdirectory (different functions on different interfaces)
OK	OK	Confirm/ Shortcut of frequency setting via keyboard
Stop	Stop/Reset	To stop or reset
RUN	RUN	To start running
	Move	Move the cursor up/down/left/right, add/ reduce values, turn pages

Home page

VF-400-PAN-G adopts 240×160 dot matrix LCD for display including 3 monitoring parameters or 6 submenu items at the same time.

The LCD display is divided into different sections for different contents under each interface, taking the contents displayed in the main monitoring interface during shutdown as an example.

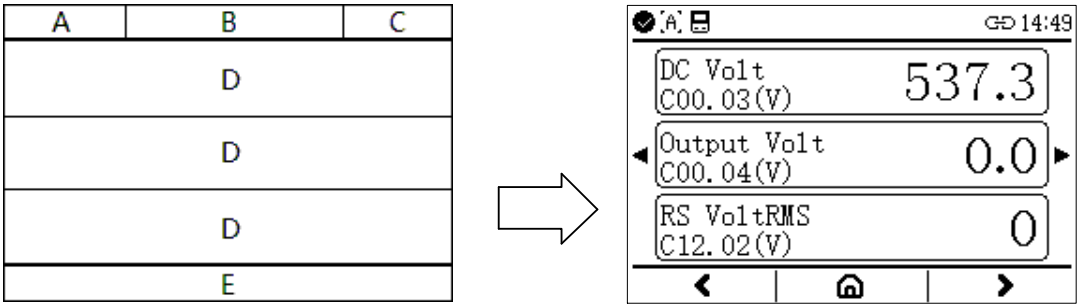

Figure 3-3 Display of the main monitoring interface under shutdown

Table 3-2 VF-400-PAN-G interface display

Section	Name	Content
Status bar A	Drive status	Display drive status: ● Drive status: undervoltage, ready, fault, running, tuning etc. ● Drive type: inverter, rectifier or DCDC ● Drive command channel: keyboard, terminal or background
Status bar B	Drive model and station number	● Drive type: VF-400 ● Drive station: 0x01~0xFF for multiple motors
Status bar C	Keyboard status	● Real time ● Communication connection
Content section D	Name, code, and value of drive monitor parameters	Display the name of the parameters monitored by the AC drive, the corresponding function codes, and the current values. 3 monitoring parameters can be displayed at the same time.
Menu bar E	Key menu	The menu corresponding to the function keys, contents vary under the different menus on different interfaces.

Status indicator

VF-400-PAN-G intelligent keyboard with status indicators can display the current equipment fault information and operation status, the specific light indicator description is as follows:

Table 3-3 Status indicator description

Indicator status	Form	Description
	Green light off	The AC drive is in the shutdown status
	Green light flashing	The AC drive is auto self-tuning status
	Green light on	The AC drive is in the running status
	Red light off	Normal
	Red light flashing	Pre-warning
	Red light on	Fault

3.1.3 Trunking to PC

The USB terminal at the bottom of the front of VF-400-PAN-G is used to connect with PC, and the length of the connection cable shall not exceed 3 meters, and the communication between VF-400-PAN-G and PC adopts USB2.0 communication protocol.

Procedure

1. Open the USB connection terminal cover.
2. Plug in the USB cable, and connect the cable to the PC. A cable with a ferrite magnet ring is recommended.
3. Select the operating mode as required

- "USB Relay" mode: used for data communication between PC and the drive.
- "USB Mass Storage" mode: used for file processing from PC to SD card of VF-400-PAN-G.

3.2 VCACSoft Debugging Software

The VCACSoft debugging software is developed by VEDA MC with completely independent intellectual property right. It is the debugging software for our high-performance engineering AC drives, which can be used for debugging, troubleshooting and monitoring the operation status of the driven objects.

3.2.1 Software Installation

VCACSoft debugging software is installation-free, download and click on 

to run it.

3.2.2 Main Interface

Double click on 

, and the interface is shown as below:

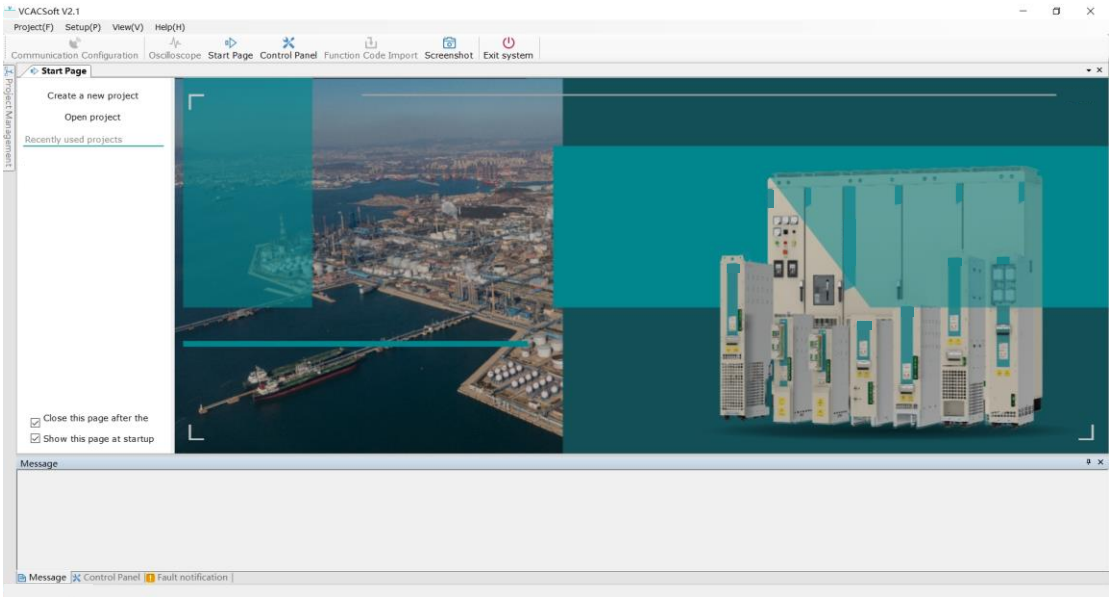

Figure 3-4 Main interface

3.2.3 Create A New Project

Procedure

1. Click “Create a new project”, name the project and click "Next".

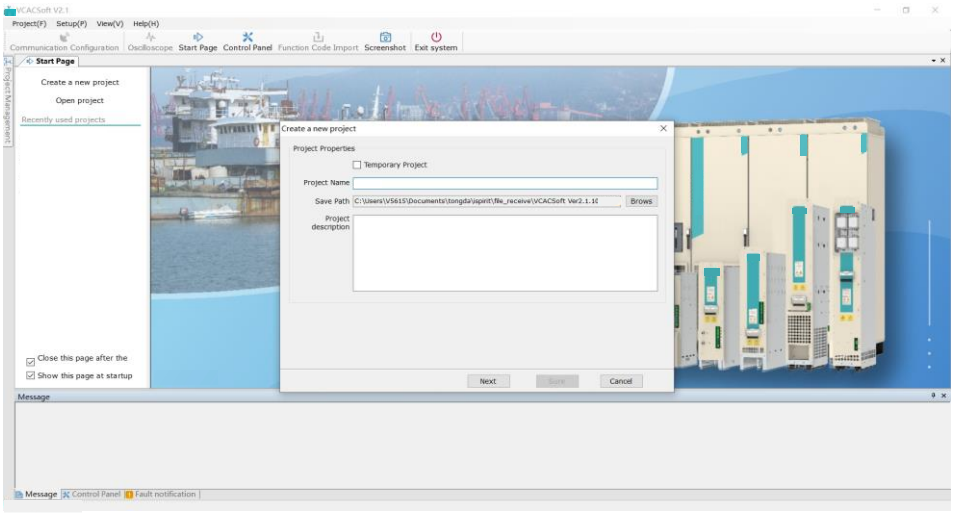

Figure 3-5 Name the project

2. Refresh the COM port and set the baud rate (choose “Adaptive” if you are not sure about the baud rate) and data format.

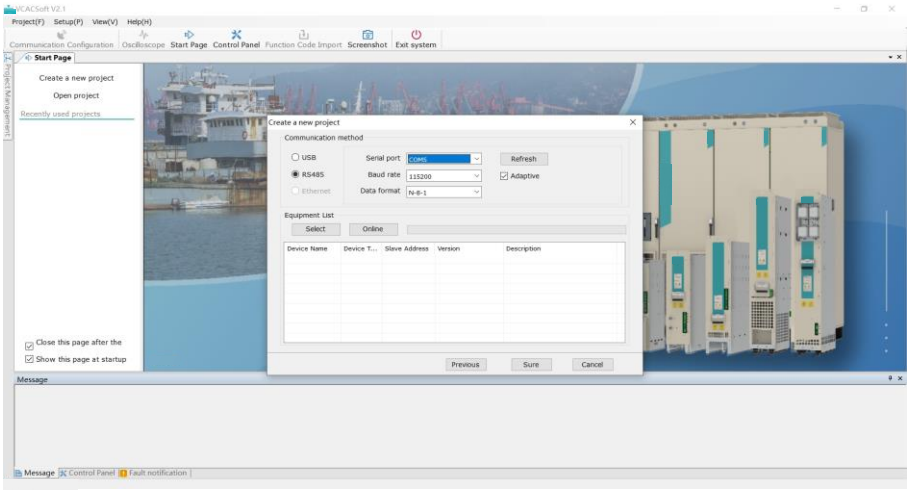

Figure 3-6 Set the communication method

3. Click on "Select offline device" to select the DCDC.

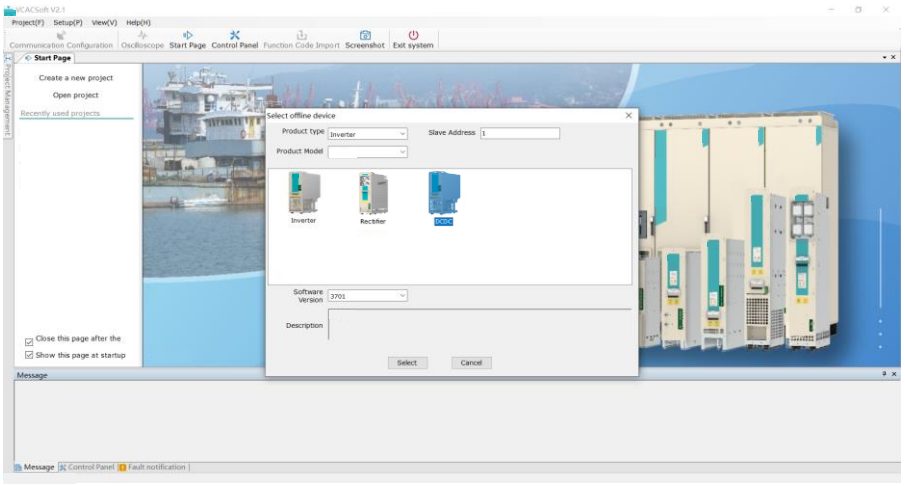

Figure 3-7 Select the offline device

4. Check the parameter settings of the new project.

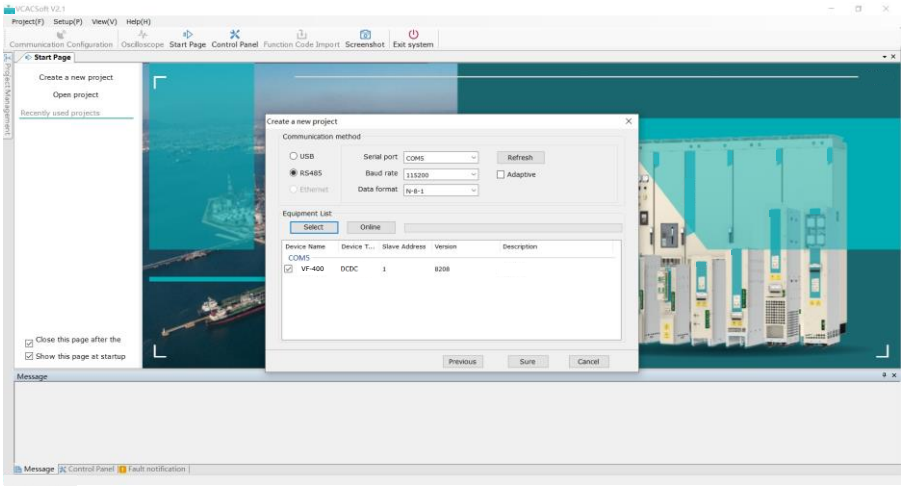

Figure 3-8 Check the new project

5. Click "Sure" to enter the following interface after the communication is successfully connected.

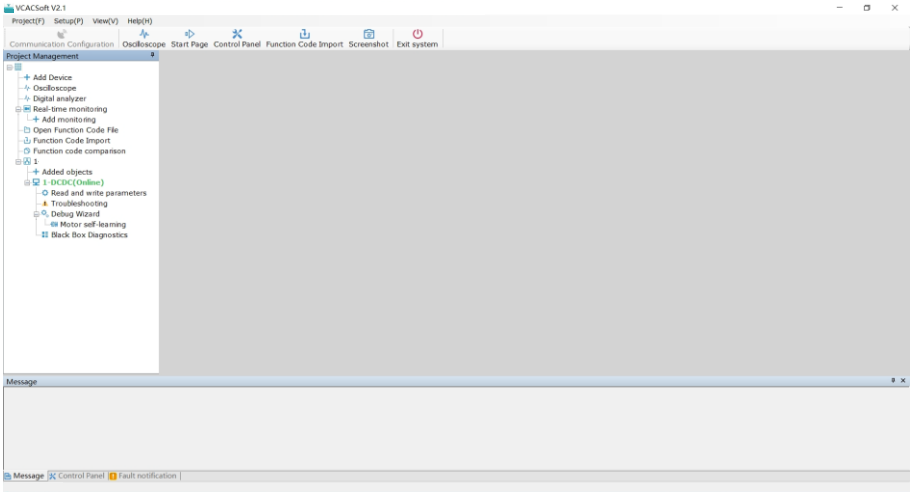

Figure 3-9 Manage the project

3.2.4 Basic Function

Procedure

- View and read parameters

1. Select “1-VF-400 > 1-DCDC > Read and write parameters” in the left project management section to see the “Rectifier-Read and write parameter” column on the right.

2. Click "Read" to read the parameters in batch.

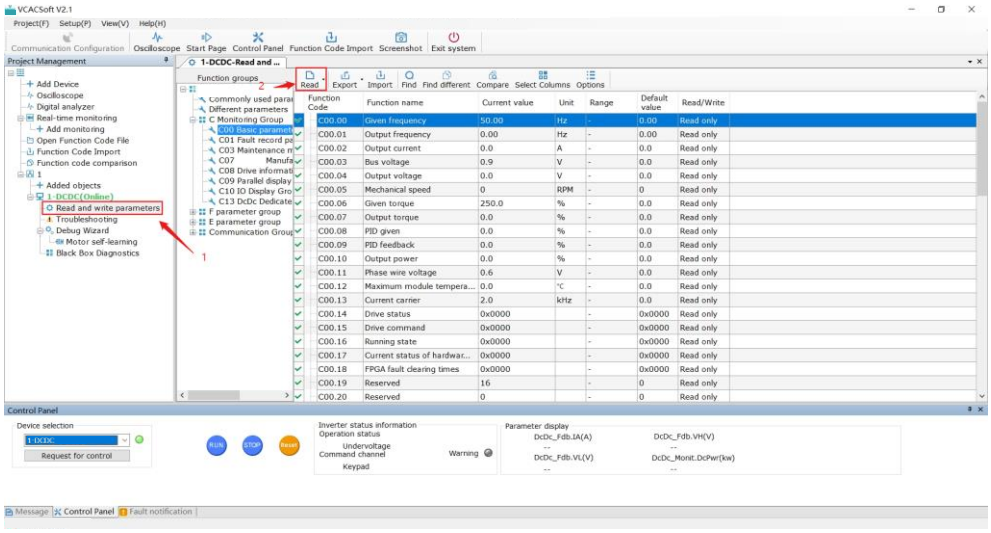

Figure 3-10 View and read parameters

Note:

■ The left side of the parameter list is the parameter groups and the right side is the parameter information of this group.

■ In the “Parameter information” column, users can view information such as function names, current values, unit, range, default values, and attributes.

■ Once the function code modification is completed, it is downloaded to the device.

■ When the current value of the function code does not match the default value, it is displayed in red in the “Current value” column.

- Control panel

1. Click "Control panel" to start and stop the device, reset fault or perform other operations. Drive status information and real-time monitoring parameters are also displayed.

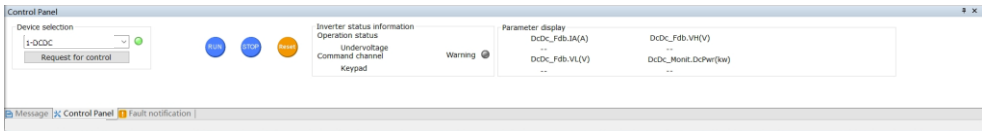

Figure 3-11 Control panel

2. Click "Request for control" to get control of devices through the control panel; or set F01.01[Operation command channel] to RS485 communication.

3. After obtaining the control authority, start/stop of the device can be controlled through "Start" and " Stop".

4. Click "Reset" to reset fault.

- Check fault warning

1. Check the current fault

a) Select "1 > 1-DCDC > Troubleshooting" in the “Project management” section on the left.

b) Click on "Read fault" to get the current fault information.

c) Click on "Fault notification" to get the current fault information (fault and alarm messages).

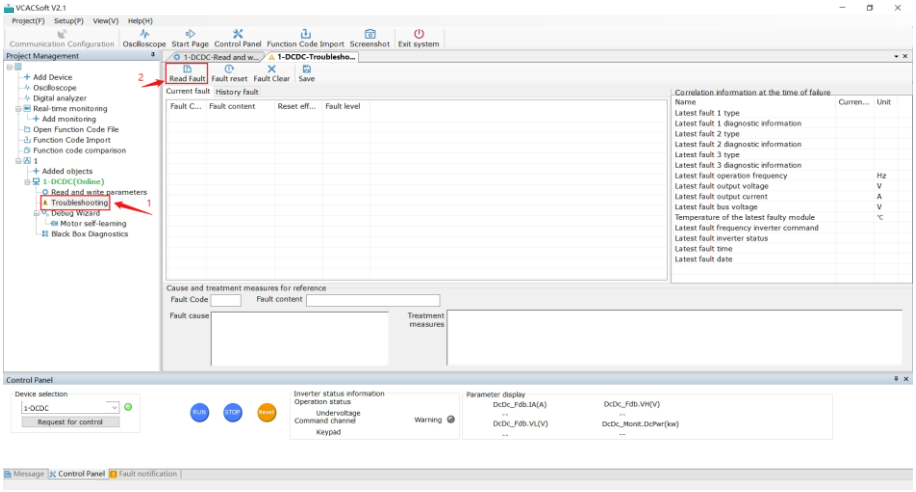

Figure 3-12 View current fault

2. Check the fault history

Fault history is available via F29 fault parameters.

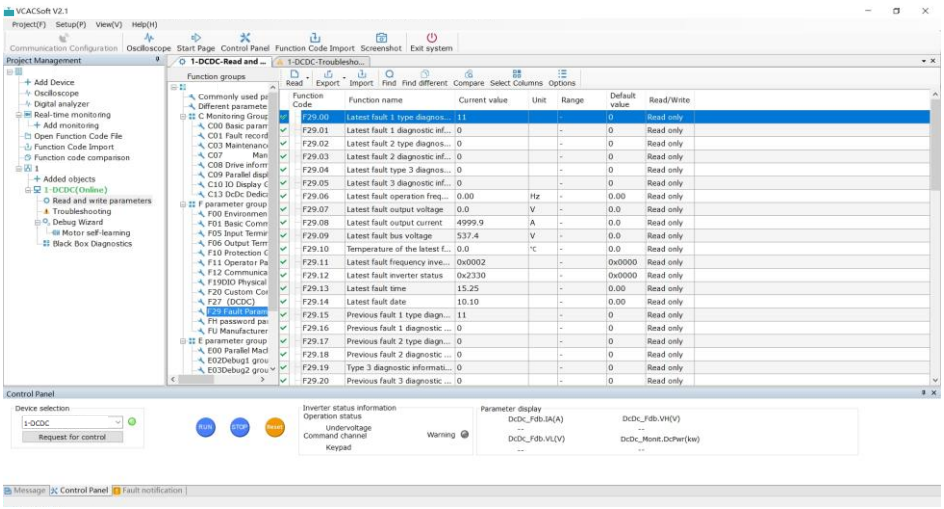

Figure 3-13 Check the fault history

3.2.5 Waveform Record and Analysis

The most important aspect of debugging performance is the analysis of real-time data curves. VCACSoft provides three different means to realize online real-time recording, condition-triggered recording, and offline viewing of waveforms.

Procedure

- Continuous oscilloscope

During on-site debugging, it is usually necessary to monitor the operation status of the device in real time. The continuous oscilloscope in VCACSoft can monitor and record the relevant data or status of the device in real time. The monitoring interface is shown in the figure below:

1. Click "Oscilloscope" on the main interface.
2. Click "Channel" to select the item to be observed
3. Click "Start" to monitor and record the data or status of the device in real time through the oscilloscope.
4. Click "Label", when the cursor is on the oscilloscope interface, and then users can read the current value of the item.

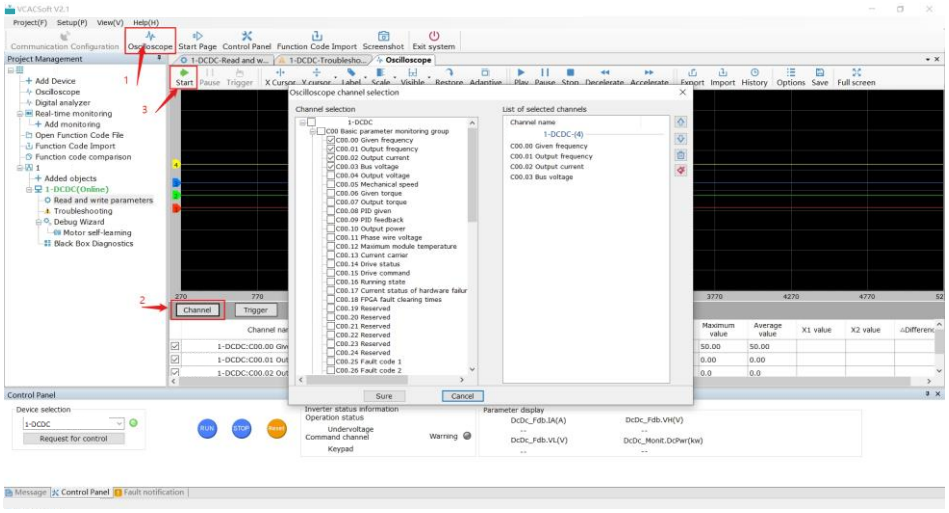

Figure 3-14 Continuous oscilloscope monitor interface

● Trigged oscilloscope

The oscilloscope can be triggered to record waveforms when conditions are set beforehand.

1. Open the “Oscilloscope” interface.
2. Click on “Channel” to select the required parameters.
3. Click “Trigger” to configure the conditions, which mainly include:

   ☑ Set the options to trigger A, A & B, A or B.

   ☑ Set to trigger A/ B, including trigger modes, trigger channels, trigger conditions and trigger values (check “Trigger value with sign”).

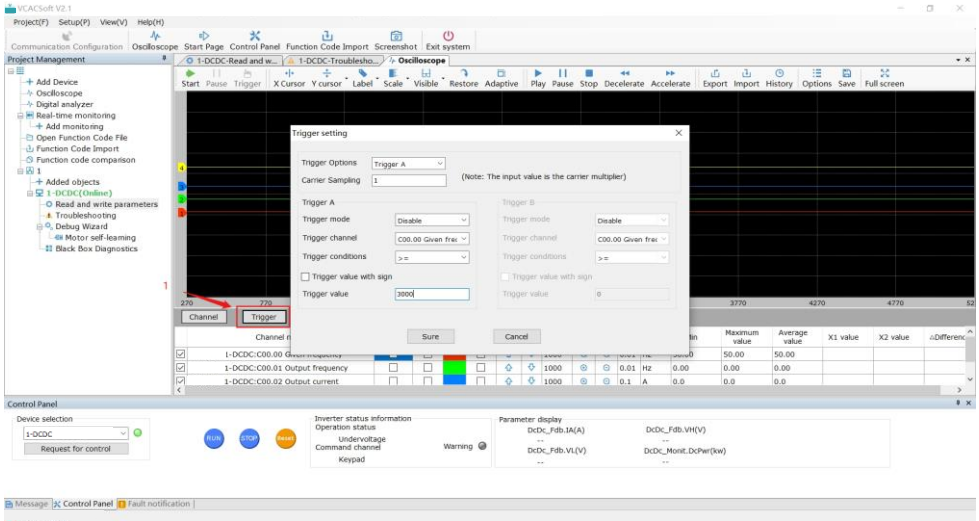

Figure 3-15 Triggering oscilloscope settings

● Black box function

When a fault occurs on the AC drive, data 1.5 seconds before and 0.5 seconds after will be collected, including 16 pieces of ADC interrupt data (11 of internal data, 5 of customized data) and 64 pieces of 2ms cycle data (48 of internal data, 16 of customized data). The collected data will be automatically saved to the SD card of the VF-400-CINU+DCDC, which can store up to 1000 sets of fault data sent recently. They can be viewed and read by VCACSoft software.

1. Select "Read and write parameters > E parameter group E10 Black Box Function Module" in “Project management” to view the current status of the black box function.

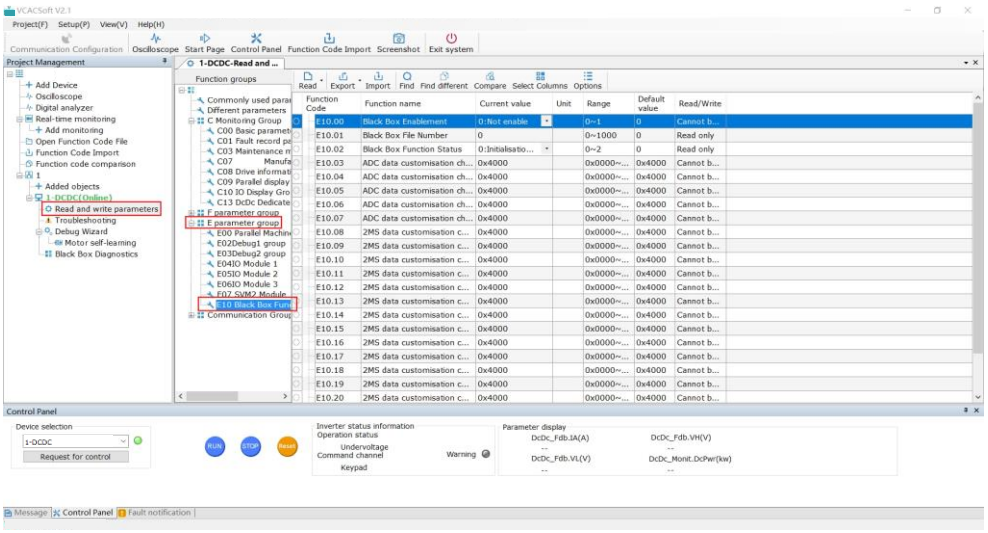

Figure 3-16 Check the status of the black box

Parameter description:

- E10.00_black box enabling: (0: not enabled; 1: enabled)
- E10.02_black box status: (0: initialization not completed; 1: initializing; 2: initialization completed)
- E10.03~07_ADC data customization channel: users can customize the parameter channels monitored of black box, the parameter value is the communication address of the monitoring parameter group, e.g. 0x4000 corresponds to monitoring parameter C00.00[Given frequency].
- E10.08~23_2MS data customization channel: the parameter value is the same as ADC interrupt data. The "Black box enable" can be set to "Enable" only when the "Black box status" is under "Initialization is completed".

2. Select “DCDC > Black box diagnostics” in “Project management”, enter the Black box interface, "Get list" to view the faults and time saved in the SD card.

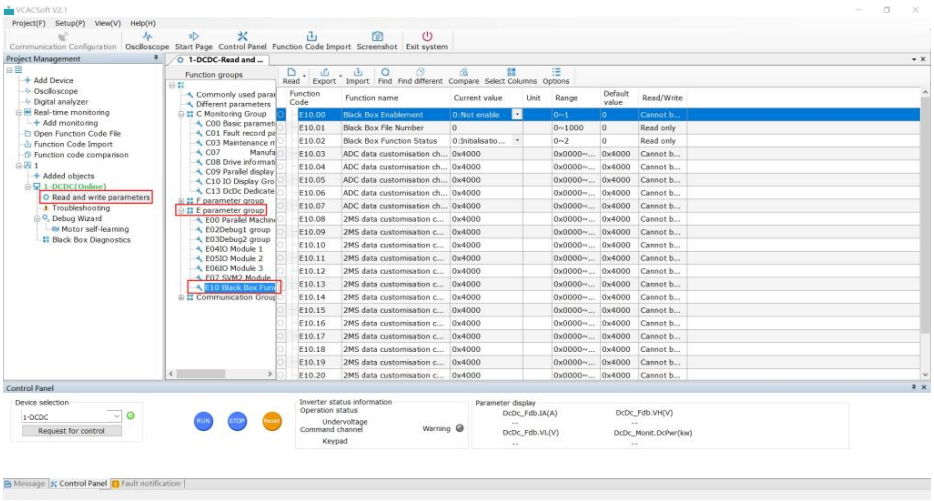

Figure 3-17 Check faults and time

3. Select one of the faults, click "Read", and VCACSoft will automatically read the fault entry. Please do not disconnect the AC drive from the host computer at this time.

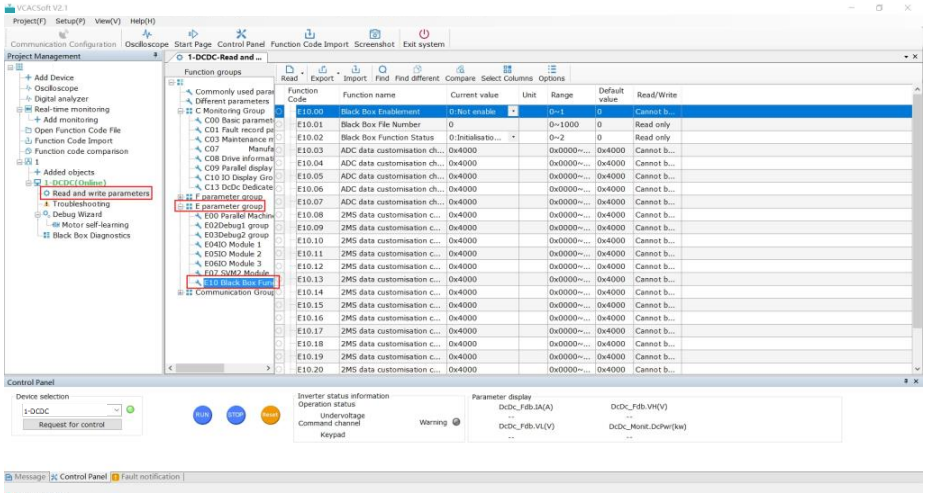

Figure 3-18 Read the fault entry

4. After reading the fault records, VCACSoft automatically displays the "Channel selection" interface, please select the timing data channel or ADC interrupt data channel and click "Sure".

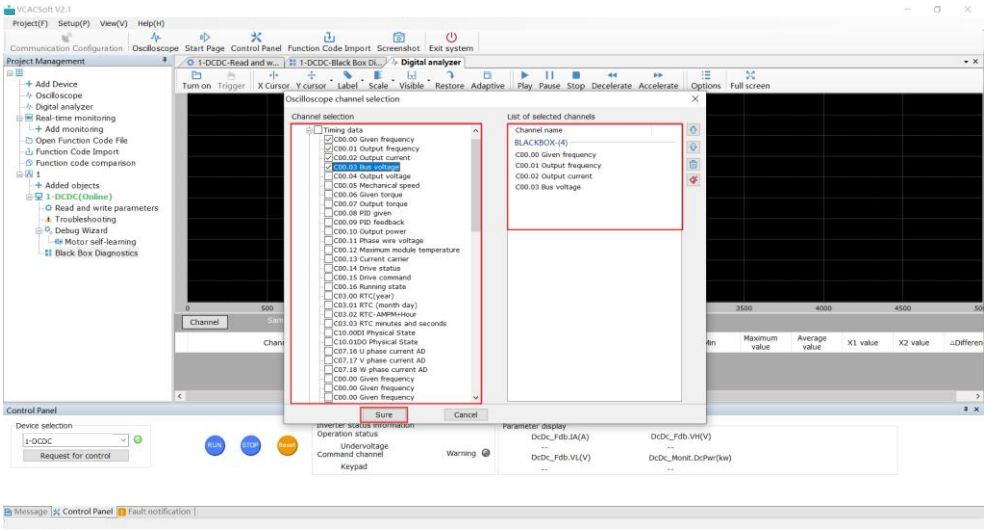

Figure 3-19 Select timing data

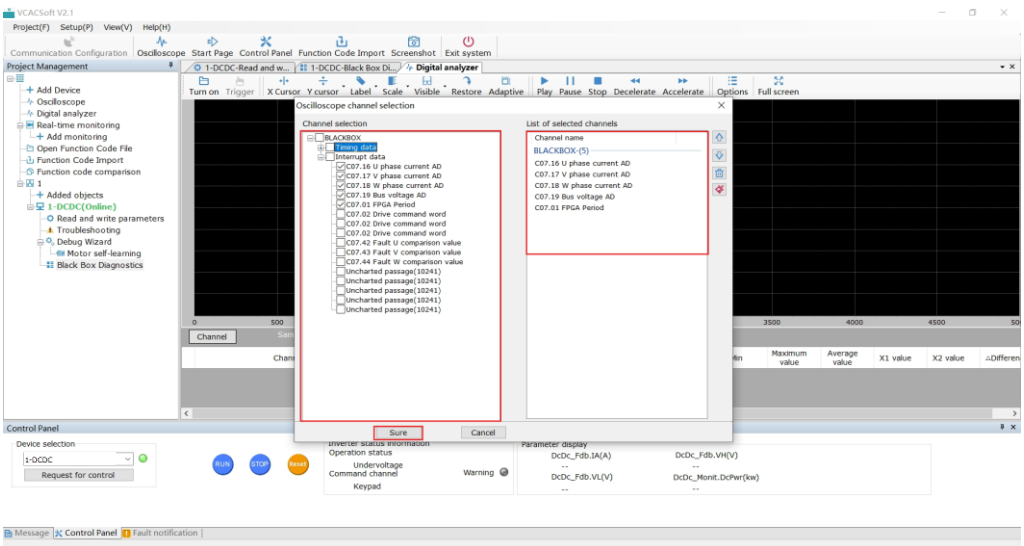

Figure 3-20 Select interrupt data

Note: Timing data and interrupt data cannot be selected simultaneously.

5. In the "Digital analyzer" interface, view the data waveform and click "Channel" if you want to change the data channel.

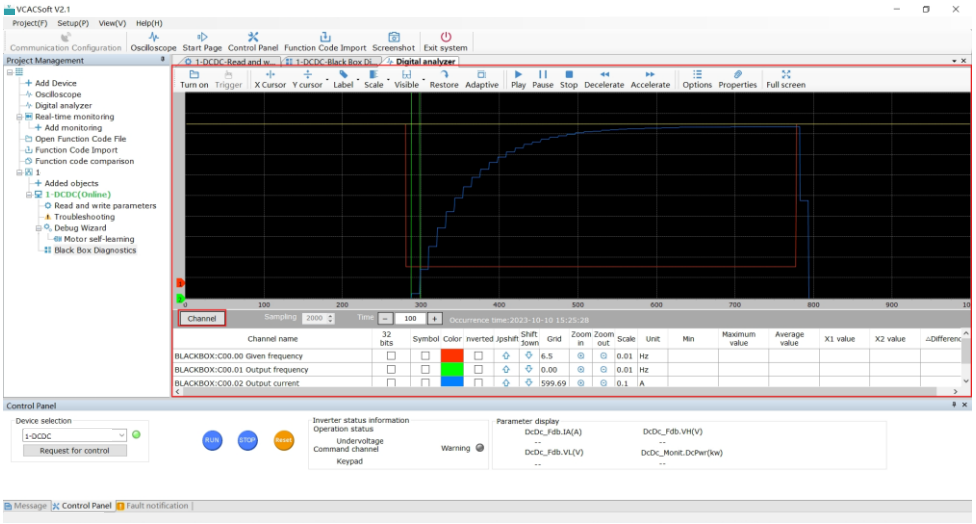

Figure 3-21 View the data waveform

6. For the fault information that has been read to the host computer, click "View" to view the fault. Users can also select one of the faults and click "Delete" to delete it from the SD card.

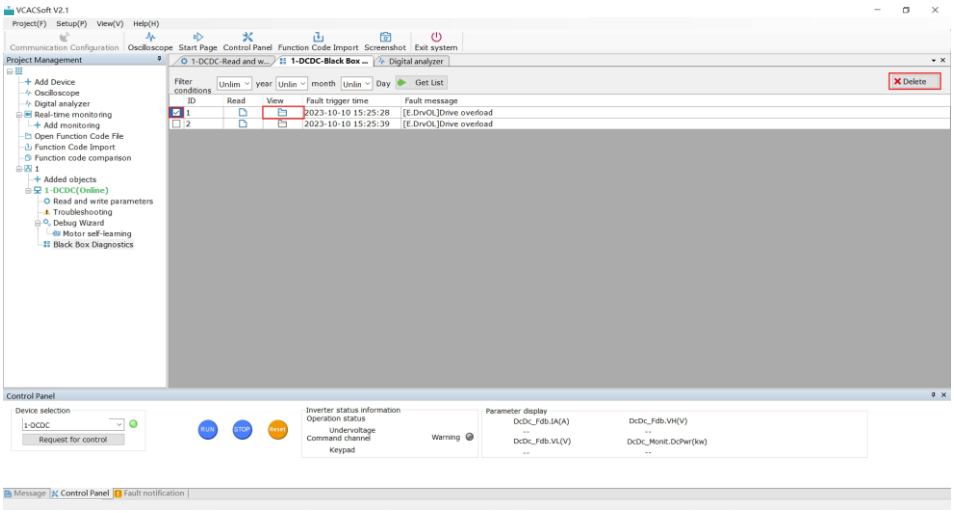

Figure 3-22 View or delete faults

Chapter 4 Quick Debugging Guide

This chapter mainly introduces the basic debugging steps of VF-400-AFE series products, including rectifier power-up, trial operation and parameter description.

System debugging process

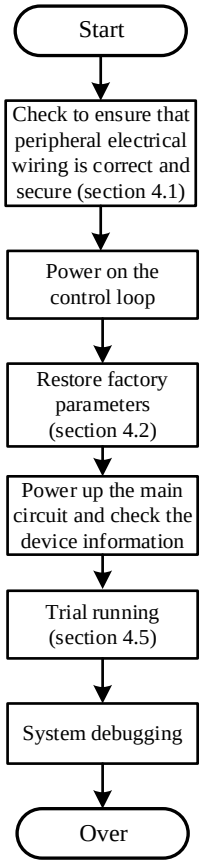

Figure 4-1 System debugging flowchart

4.1 Hardware Wiring Checking

Before powering up the control system for debugging, please check the hardware wiring according to the table below.

Table 4-1 Hardware wiring checklist

No.	Item	Checked	Done
1	Connect input power and load cables to ensure correct voltage	□	□
2	Ensure correct voltage from the auxiliary power supply	□	□
3	Fix I/O power cables to the cable bracket to reduce tension	□	□
4	Connect the cables to the connectors with specified torque	□	□
5	Use a threaded sleeve connector on the motor terminal box that contacts the shield over a large area and is grounded with EMC shielded cables. Fix the cable shield layer to the shield plate in the chopper module to meet EMC regulations	□	□
6	Ensure correct connection between parallel DC chopper modules	□	□
7	Check the date on the DC chopper module nameplate. Pre-charge the DC bus capacitors as specified if the first debugging or power module is 2 years behind the nameplate date. It's fine if it is within 2 years	□	□
8	Control cables should be connected according to the corresponding interface layout and arranged according to the shield. To prevent interference, the control cable should be laid separately from the power cable. In principle, the relevant EMC directives should be observed	□	□

4.2 Factory Reset

After the control circuit is powered up for the first time, please restore the factory values first. The relevant function codes are set as below:

F00.03 = 2, initialize the selected parameters; after the initialization is completed, F00.03 is again assigned to 0.

Note: Debugging is already done before shipment, so parameters do not need to be initialized. But if it is a single module, parameters need to be initialized.

4.3 Power Module Checking and Setting

4.3.1 Equipment Information Checking

The equipment information checking is shown in the following table.

Table 4-3 Equipment information checklist

Code	Name	Description
C08.00	Product type	2: DCDC
C08.01	Module rated power	Display single module rated power
C08.02	Module rated voltage	Display single module rated voltage
C08.03	Module rated current	Display single module rated current
C08.04	Total parallel rated power	Display parallel rated current
C08.05	Total parallel rated current	Display parallel rated current
C08.06	CU software type	-
C08.07	DSP software version number	-
C08.09	Main board FPGA software version	-
C08.10	Interface board type	-
C08.11	Interface board software version	-
C08.12	Parallel board software version	-

Note: If the rated power and voltage level of the power module are not consistent with the nameplate, it could be wrong model setting, please contact the manufacturer to reset and download the correct one.

4.3.2 Detection Parameter Setting

For the DC chopper unit, it is necessary to set the detection reasonably according to the actual situation. The following figure illustrates the sample setting of the DC chopper. For details on the sample setting, refer to "2.2 Detection".

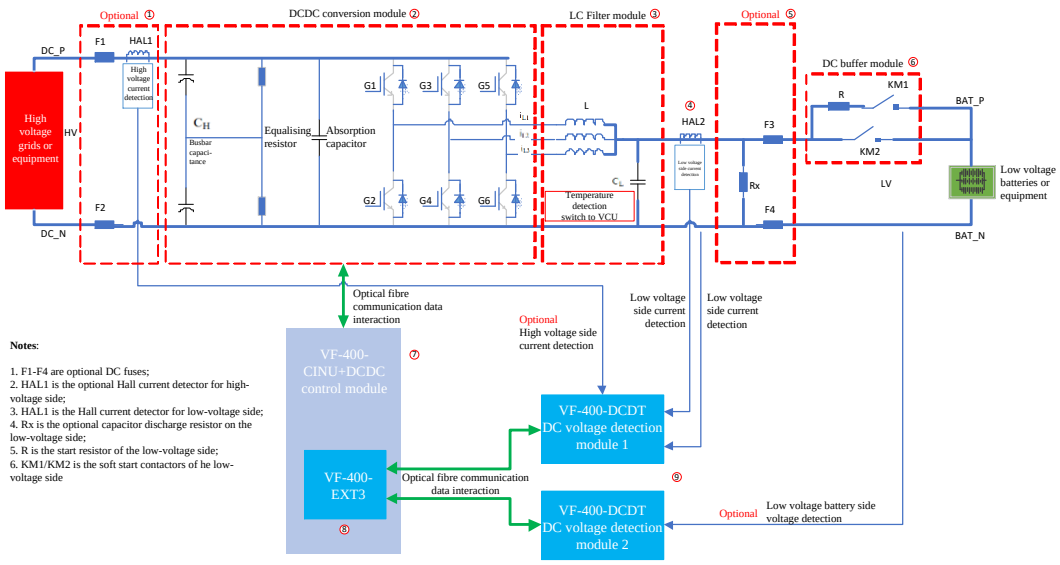

Figure 4-2 DC chopper device system topology diagram

- Configure VF-400-DCDT synchronous voltage and current detection module

The VF-400-DCDT synchronous voltage and current detection module can detect 1-channel DC voltage and 2-channel

DC current. The DC chopper unit needs to use one or more sets of VF-400-DCDT modules for I/O voltage and current detection.

The VF-400-DCDT synchronous voltage and current detection module must be correctly set up before the DC chopper module starts. Incorrect settings or disconnection of the VF-400-DCDT module will trigger corresponding fault warnings.

The VF-400-CINU+DCDC controller supports the simultaneous use of up to three sets of VF-400-DCDT modules, which can be configured separately in the E7 group. The configuration steps are as follows:

1. Check the actual expansion slot location of the VF-400-DCDT module in C08.13-C08.31.
2. If the VF-400-DCDT module is shown in C08.13-C08.31, set E07.00 to the appropriate expansion slot.

Note: If the VF-400-DCDT module is not shown in C08.13-C08.31, users need to check if the VF-400-DCDT module is connected or powered.

● Configure the detection sources for detection

As shown in Figure 4-2, the DC chopper unit detects voltage/current via the VF-400-DCDT synchronous voltage detection module. It is necessary to configure the VF-400-DCDT synchronous voltage detection module and detection channel corresponding to each detection source of the DC chopper module on the VF-400-CINU+DCDC controller. The configuration steps are as follows:

1. Set F27.42 [Detection configuration method] = 0 [Customized configuration].
2. Set F27.44 [LV-side positive current detection source].
3. Set F27.44 [LV-side positive current detection source].
4. Set F27.45 [HV-side positive current detection source].

For Figure 4-2, the detection sources can be configured as follows:

◆ Configure F27.42 [Detection configuration method] = 0 [Customized configuration].

◆ The topology in the figure uses the voltage detection channel of the detection module⑨ for LV-side voltage, while ⑨ is configured with synchronized voltage detection module①, so set F27.43 [LV-side voltage detection source] = 11 [<VF-400-DCDT module①> voltage detection channel].

◆ The topology in the figure uses the current detection channel A in the detection module⑨ for the LV-side positive current, and ⑨ is configured with the synchronous voltage detection module①, so set F27.44 [LV-side positive current detection source] = 11 [<VF-400-DCDT module①> current detection channel A].

◆ The topology in the figure uses the current detection channel B in the detection module⑨ for the HV-side positive current, and ⑨ is configured with the synchronous voltage detection module①, so set F27.45 [HV-side positive current detection source] = 12 [<VF-400-DCDT module①> current detection channel B].

● Configure the current forward function

The LV-side current feedforward and HV-side current feedforward are on by default on the VF-400-CINU+DCDC controller. If there is no LV-side or HV-side current feedforward configured, please disable the corresponding current feedforward functions, its codes are shown as follows:

Table 4-4 Function codes description

Code	Name	Content
F27.07	LV-side current forward enable	If the LV-side positive current detection source is selected as F27.44=0 [Not enabled], please disable LV-side current forward function, set F27.07=0 [Not enabled].
F27.08	HV-side current forward enable	If the HV-side positive current detection source s selected as F27.45=0 [Not enabled], please disable the HV-side current forward function, set F27.08=0 [Not enabled].

4.4 Parameter Setting

4.4.1 Operating Mode Setting

The default operating mode of the VF-400-CINU+DCDC is the voltage mode (LV side), and different operating modes can be set by function codes F27.00 [Operation mode] and F27.02 [Voltage mode selection].

Table 4-5 Working mode description

Operating mode	Operation mode [F27.00]	Voltage mode selection [F27.02]
Voltage mode (LV side)	0 [Voltage mode]	0 [LV side]
Voltage mode (HV side)	0 [Voltage mode]	1 [HV side]
Current mode	1 [Current mode]	-

Note:

Set the suitable operating mode according to the actual conditions, and please refer to "2.1 Operating Modes" for the application conditions of different operating modes.

4.4.2 Voltage or Current Settings

The voltage/current setting is related to the modes set in "4.4.1 Operating Mode Setting":

- For voltage mode (LV side), it is required to set a suitable target value for the LV-side voltage.
- For voltage mode (HV side), it is required to set a suitable target value for the HV-side voltage.
- For current mode, it is required to set a suitable current value.

Note:

Voltage and current setting are set with values representing different channels, and when different channels are selected, the corresponding parameter groups differ. Take channel 1 as an example:

- Set LV-side voltage

  The target voltage value can be set with F27.15 [LV-side voltage setting via number entering].

- Set HV-side voltage

  The target voltage value can be set with F27.17 [HV-side voltage setting via number entering].

- Set current

  The current source can be changed via F27.18 [Current source], and when F27.18 is set to 0 [set via number entering], the target current value can be set directly via F27.19.

4.5 Trial Operation

4.5.1 Start via Upper PC/Keyboard

It is recommended to use upper PC software or keyboard to start the device for the first trial operation, please refer to "Chapter 3 Debugging Tools" for specific steps.

4.5.2 Start via Keyboard Number Entering and Analog Input

The device start/stop can be controlled via the digital input terminals and given speed from analog. For example, use DI1 as a Start run command, DI2 as a Stop command, and DI3 as a fault reset command.

Table 4-6 Parameter description

Code	Name	Set value	Description
F05.00	DI1 function selection	1	Start
F05.01	DI2 function selection	6	Stop
F05.02	DI3 function selection	8	Fault reset
F01.01	Command running channel	1	Terminal controlled

Chapter 5 Function Module Description

5.1 Channel Setting

5.1.1 Voltage setting

The VF-400-CINU+DCDC can set 2 voltage channels for LV-side and HV-side independently, and they can be switched online via F27.13.

And the 2 settings correspond to the voltage under LV-side voltage control and HV-side voltage control respectively when operating in voltage mode.

Voltage giving channel selection:

Table 5-1 Voltage giving channel selection description

Channel	Code	Name	Content
F27.13=0 Channel 1	F27.15	[Channel 1] LV-side voltage digital setting	Voltage value set via digit entering for LV-side voltage
	F27.17	[Channel 1] HV-side voltage digital setting	Voltage value set via digit entering for HV-side voltage
F27.13=1 Channel 2	F27.29	[Channel 2] low-side voltage digital setting	Voltage value set via digit entering for LV-side voltage
	F27.31	[Channel 2] HV-side voltage digital setting	Voltage value set via digit entering for HV-side voltage

5.1.2 Current Setting

The VF-400-CINU+DCDC supports 2 current setting channels which are completely independent, and can be switched online via F27.13.

When F27.18/F27.32 [Current source] = 1 [HV-side regulator], the actual valid current is the set value of HV-side regulator. (F27.53-F27.58).

Current channel selection:

Table 5-2 Current setting channel selection description

Channel	Code	Name	Content
F27.13=0 Channel 1	F27.15	[Channel 1] Current source	Select the current source as follows: 0: set by digit entering 1: set by HV-side regulator
	F27.17	[Channel 1] Current setting via digit entering	Digitally set current value
F27.13=1 Channel 2	F27.32	[Channel 2] Current source	Select the current source as follows: 0: set by parameter number 1: set by HV-side regulator
	F27.33	[Channel 2] Current setting via digit entering	Digitally set current value

5.1.3 Range Setting

The VF-400-CINU+DCDC supports 2 channels to set the range for limiting the voltage/current/power of channel 1 and channel 2.

Voltage range on the LV side

Range of the LV-side voltage here is the limit on valid channels in the voltage mode (LV side).

Table 5- 3 Voltage limit setting on the LV side

Channel	Code	Name	Content
F27.13=0 Channel 1	F27.20	[Channel 1] LV-side voltage upper limit	Limit the actual valid voltage on the LV side
	F27.21	[Channel 1] low-side voltage lower limit	Limit the actual valid voltage on the LV side
F27.13=1 Channel 2	F27.34	[Channel 2] low-side voltage upper limit	Limit the actual valid voltage on the LV side
	F27.35	[Channel 2] low-side voltage lower limit	Limit the actual valid voltage on the LV side

Voltage range on the HV side

Range of the HV-side voltage here is the limit on valid channels in the voltage mode (HV side).

Table 5- 4 Voltage limit setting on the HV side

Channel	Code	Name	Content
F27.13=0 Channel 1	F27.22	[Channel 1] HV-side voltage upper limit	Limit the actual valid voltage on the HV side
	F27.23	[Channel 1] HV-side voltage upper limit	Limit the actual valid voltage on the HV side
F27.13=1 Channel 2	F27.36	[Channel 2] HV-side voltage upper limit	Limit the actual valid voltage on the HV side
	F27.37	[Channel 2] HV-side voltage upper limit	Limit the actual valid voltage on the HV side

Current range

Current range is effective in all operating modes and it also limits the current of the corresponding valid channel in the current mode.

The VF-400-CINU+DCDC can be configured with different limits for positive and negative currents respectively, and digit entering is available for current direction setting.

Table 5- 5 Amplitude limiting description

Channel	Code	Name	Content
F27.13=0 Channel 1	F27.24	[Channel 1] Positive current limit via digit entering	Limit the actual valid current
	F27.25	[Channel 1] Negative current limit via digit entering	Limit the actual valid current
F27.13=1 Channel 2	F27.38	[Channel 2] Positive current limit via digit entering	Limit the actual valid current
	F27.39	[Channel 2] Negative current limit via digit entering	Limit the actual valid current

Power range

Power range is effective in all operating modes.

Different ranges of positive and negative direction power can be set on the VF-400-CINU+DCDC respectively, and digit entering is available for power direction setting.

Table 5- 5 The power limit setting

Channel	Code	Name	Content
F27.13=0 Channel 1	F27.26	[Channel 1] Positive power limit via digit entering	Limit the actual power on the LV side
	F27.27	[Channel 1] Negative power limit via digit entering	Limit the actual power on the LV side
F27.13=1 Channel 2	F27.40	[Channel 2] Positive power limit via digit entering	Limit the actual power on the LV side
	F27.41	[Channel 2] Negative power limit via digit entering	Limit the actual power on the LV side

5.2 Application Function

5.2.1 HV-Side Voltage Regulator

DCDC device provides HV-side regulator function: in the current mode, current on the low-voltage side of DCDC device is adjusted automatically according to the HV-side bus voltage change, so as to keep the bus voltage within a certain range. With the HV-side regulator function, the relationship between the HV-side voltage and the current generated by the regulator is as follows:

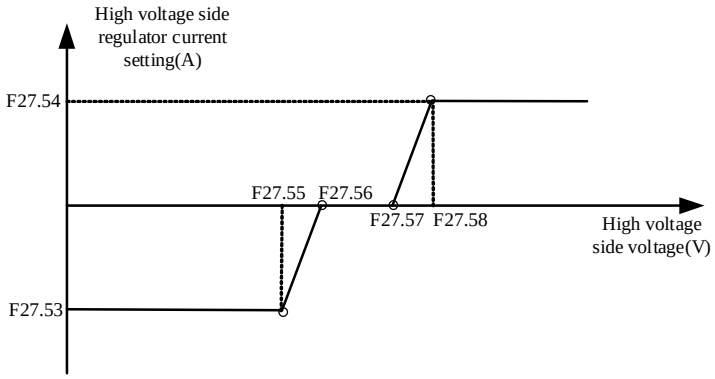

Figure 5-1 Relationship of HV-side voltage and HV-side regulator current

The HV-side regulator setting is as follows:

1. Configure F27.53 and F27.54 properly to set the max. positive current value and max. negative current value of the HV-side regulator.
2. Configure the four voltage points F27.55-F27.58 of the HV-side regulator appropriately.
3. Set F27.00 [Operation mode] to 1 [Current mode].
4. Set the current source (F27.15 or F27.32) to 1 [HV-side regulator] among the current valid channels.

Note: HV-side regulator voltage settings are required to be increased on F27.55-F27.58, otherwise this wrong setting will cause the current generated by the regulator to be zero.

Table 5- 7 HV-side regulator description

Code	Name	Content
F27.53	[HV side regulator] Max. negative current via digit entering	Set max. negative current via digit entering
F27.54	[HV side regulator] Max. positive current via digit entering	Set max. positive current via digit entering
F27.55	[HV side regulator] HV-side voltage point1 (max. negative current)	The current generated by the HV-side regulator is the actual valid max. negative current if below this setting, and the energy storage device on the LV side discharges at the set max. capacity.
F27.56	[HV side regulator] HV-side voltage point2 (Negative current starts)	The current generated by the HV regulator turns negative from 0 if below this voltage point.
F27.57	[HV side regulator] HV-side voltage point3 (Positive current starts)	The current generated by the HV regulator turns positive from 0 if above this voltage point.
F27.58	[HV side regulator] HV-side voltage point4 (max. positive current)	The current generated by the HV-side regulator is the actual valid max. positive current if above this voltage point, and the energy storage device on the LV-side is charged at the set max. capacity.

5.2.2 Positive Current Limit Curve

The VF-400-CINU+DCDC provides a positive current limit curve function, which limits the positive current of the LV-side energy storage equipment at different stages based on the LV-side voltage of the DCDC device when the LV-side load is an energy storage device such as a battery, so that when the DCDC device is charging to the LV-side energy storage device, the characteristics of the energy storage equipment (particularly the battery charging characteristic curve) are adaptive and charging is ended timely. The relationship between the LV-side voltage and the generated charging (positive) current limit is shown below:

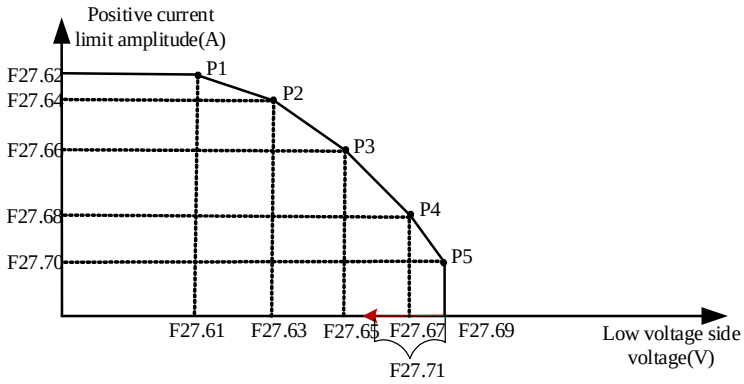

Figure 5-2 The relationship between LV-side voltage and positive current limit

The configuration of the charging current limit curve on the LV side is as follows:

1. Configure the 5 sets of voltage/current setpoints to F27.61-F27.70 of the positive current curve correctly.
2. Configure the LV-side charging current limit curve hysteresis loop voltage F27.71 appropriately.
3. Set F27.59=1 to enable the positive current limit curve.

Note:

- Increase voltage points 1~5 progressively on the positive current limit curve. If values are not larger and larger, it will be considered incorrect, resulting in an valid current limit of 0. This means that charging to the LV-side energy storage equipment is prohibited.
- Decrease voltage points 1~5 progressively on the positive current limit curve, otherwise the setting is incorrect, resulting in an valid current limit value of 0. This means that charging to the LV-side energy storage equipment is prohibited.

Table 5-8 Positive current limit curve

Code	Name	Content
F27.59	Positive current limit curve enable	Set the positive current limit curve on/off. 0: not enabled 1: enabled
F27.60	Positive current limit curve voltage source selection	Set the positive current limit curve voltage source 0: LV-side voltage
F27.61	Voltage point 1	Refer to positive current limit curve P1
F27.62	Current point 1	Refer to positive current limit curve P1
F27.63	Voltage point 2	Refer to positive current limit curve P2
F27.64	Current point 2	Refer to positive current limit curve P2
F27.65	Voltage point 3	Refer to positive current limit curve P3
F27.66	Current point 3	Refer to positive current limit curve P3
F27.67	Voltage point 4	Refer to positive current limit curve P4
F27.68	Current point 4	Refer to positive current limit curve P4
F27.69	Voltage point 5	Refer to positive current limit curve P5
F27.70	Current point 5	Refer to positive current limit curve P5
F27.71	Hysteresis loop voltage	After the LV-side voltage exceeds F27.69, the voltage drops back below F27.71 and the current curve comes back into effect.

5.2.3 Overvoltage and Undervoltage Protection on the LV Side

DCDC device provides overvoltage and undervoltage protection for loads on the low-voltage side when they are energy storage devices like batteries. It is necessary to avoid over-charging or over-discharging, so the VF-400-CINU+DCDC limits the positive current when LV-side voltage is too high (i.e., restrict charging when the voltage of the LV-side energy storage device is too high) and negative current when LV-side voltage is too low (i.e., restrict discharging when the voltage of the LV-side energy storage device is too low). The protection curves for the overvoltage and undervoltage on the LV-side are shown in the following diagrams.

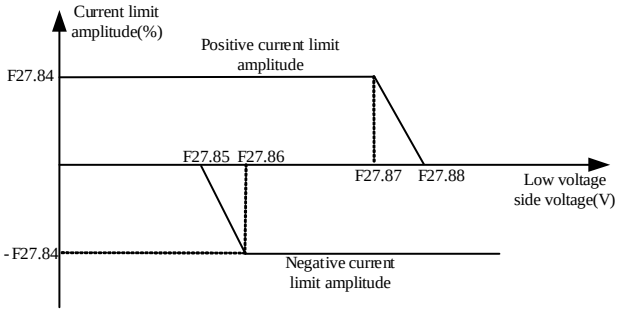

Figure 5-3 The LV-side overvoltage and undervoltage protection curve

Configuration of overvoltage and undervoltage protection on the low voltage side is as follows sequentially:

1. Configure the LV-side overvoltage and undervoltage protection current limiting F27.84 properly;
2. Configure the voltage setpoints F27.85-F27.88 for overvoltage and undervoltage protection;
3. Set F27.83=1 to enable overvoltage and undervoltage protection current.

Note:

- Increase the voltage setpoint progressively for overvoltage and undervoltage to F27.85-F27.88, otherwise the setting is incorrect, and both positive and negative currents are limited to 0.
- Since the actual positive and negative currents are limited by F27.84 when overvoltage and undervoltage protection are enabled, F27.84 should not be set too low to limit the normal operating current.

Table 5-9 The LV-side overvoltage and undervoltage protection description

Code	Name	Content
F27.83	Overvoltage and undervoltage protection enable	Set the LV-side overvoltage and undervoltage protection on/off 0: not enabled 1: enabled
F27.84	Overvoltage and undervoltage protection current limit	The max. value of positive and negative current limits for overvoltage and undervoltage protection on the LV side
F27.85	Undervoltage protection lower limit	When the LV-side voltage is lower than this value, the negative current is limited to 0, and discharging of the LV side energy storage device is prohibited
F27.86	Undervoltage protection upper limit	When the LV-side voltage is higher than this value, the negative current limit becomes smaller, and undervoltage protection enables
F27.87	Overvoltage protection lower limit	When the LV-side voltage is higher than this value, the negative current limit becomes smaller, and overvoltage protection enables
F27.88	Overvoltage protection upper limit	When the LV-side voltage is higher than this value, the positive current is limited to 0, and charging of the LV side energy storage device is prohibited

5.3 Terminal Start/Stop

5.3.1 Terminal Start/Stop Mode 1

F05.20 = 0: two-line mode1

Operation and direction are set at the same time, which is the most commonly used two-wire mode. The factory default is that the DI1 (Forward operation) and DI2 (Reverse operation) terminal control the motor to move forward and reverse.

This is shown in the figure below:

K1	K2	Run command
0	0	Stop
1	0	Forward
0	1	Reverse
1	1	Stop

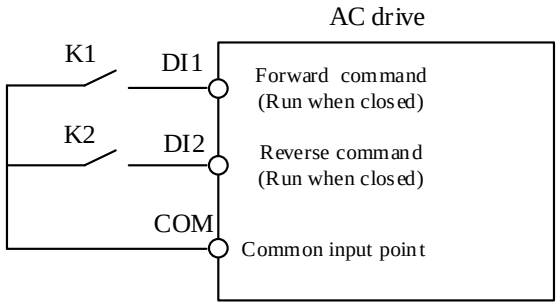

Figure 5-4 F05.20 = 0: two-line mode 1

5.3.2 Terminal Start/Stop Mode 2

F05.20 = 1: two-line mode2

Running and direction are separated. The forward running terminal DI1 (Forward operation) defined in this mode is used to enable motor running while the direction is controlled by DI2 (Reverse operation). This is shown in the figure below:

K1	K2	Run command
0	0	Stop
1	0	Forward
0	1	Reverse
1	1	Stop

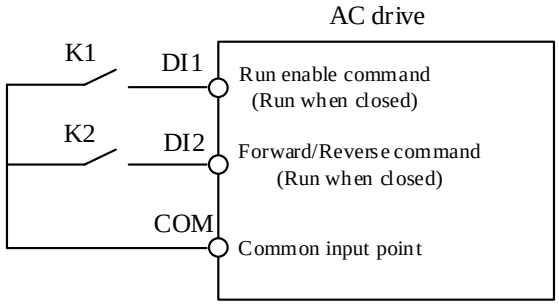

Figure 5-5 F05.20 = 1: two-line mode2

5.3.3 Terminal Start/Stop Mode 3

F05.20 = 2: three-line mode1

The three-line control terminal (DIi) of this mode is the stop terminal and the operation command is generated by DI1 (Forward operation) and the direction is controlled by DI2 (Reverse operation). The three-wire operation control terminal (DIi) is a valid input.

K1	Direction control
0	Forward
1	Reversal

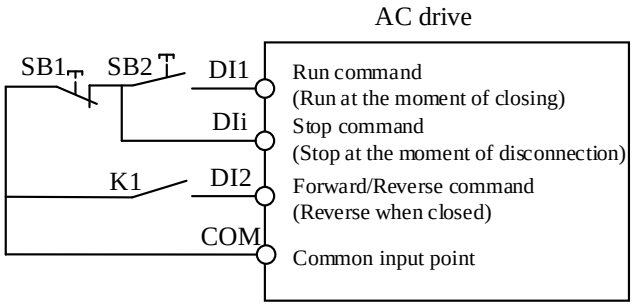

Figure 5-6 F05.20 = 2: three-line mode 1

5.3.4 Terminal Start/Stop Mode 4

F05.20 = 3: three-line 2

The three-line control terminal (DIi) of this mode is the stop terminal and the operation command is generated by DI1 (Forward operation) or DI2 (Reverse operation), and D1 and D2 can control the direction simultaneously.

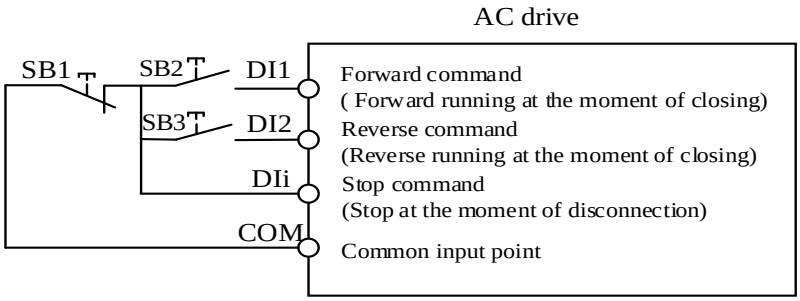

Figure 5-7 F05.20 = 3: three-line mode 2

Note: SB1: Stop; SB2: Forward operation; SB3: Reverse operation ; "DIi" is a multifunction input terminal set to "3" [3-line operation control (DIi)].

Start via terminals

Take DI2 as an example:

◆ By hardware wiring: 24V shorted to PLC

1. F01.01 (Command running channel) is set to 1: Terminal controlled.
2. F05.01 (DI2 function selection) is set to 2: Forward operation.
3. F05.20 (Terminal controlled operation mode) is set to 0: Two-line 1.
4. Trigger DI2 terminal, namely, DI2 is shorted to COM: Forward operation.

◆ By changing the polarity of the terminals

1. F01.01 (Command running channel) is set to 1: Terminal controlled.
2. F05.01 (DI2 function selection) is set to 2: Forward operation.
3. F05.20 (Terminal controlled operation mode) is set to 0: Two-line 1.
4. F19.18 (DI1-HDI2 terminal polarity selection) is set to 0x0002: Forward operation.

Stop via terminals

Take DI3 as an example:

◆ By hardware wiring: 24V shorted to PLC

1. F05.02 (DI3 function selection) is set to 6: Free stop.
2. Trigger DI3 terminal, namely, DI3 is shorted to COM: Free stop.

◆ By changing the polarity of the terminals

1. F05.02 (DI3 function selection) is set to 6: Free stop.
2. F19.18 (DI1-HDI2 terminal polarity selection) is set to 0x0004: Free stop.

Note: If both DI2 (Forward operation) and DI3 (Free stop) are triggered at the same time when the command running channel is set to terminal control mode, an alarm will be reported (running warning).

5.4 AIO, DIO, and HIO Parameter Setting

AIO includes AI and AO; DIO includes DI and DO; and HIO includes HDI and HDO.

VF-400-DCDC series DC chopper module is standard with 7 channels of digital signal input (DI1~DI6, DIL), 2 channels of high-speed digital signal input (HDI1, HDI2), 2 channels of high-speed digital signal output (HDO1, HDO2), 3 channels of relay output (RO1, RO2, RO3), 2 channels of analog input (AI1, AI2) and 2 channels of analog output (AO1, AO2). Related parameters can be set in group F.

VF-400-CINU+DCDC supports up to 3 HIO function modules at the same time, which are used to expand the I/O interfaces of VF-400-CINU+DCDC control module. Among them, VF-400-B4 IO module includes 2 channels of DIO, 2 channels of AI, 2 channels of AO and 1 channel of RO.

5.4.1 DI

The VF-400-CINU+DCDC control module is standard with 7 channels of DI signals, and 2 channels of HDI can be standard with DI signals. Hardware wiring is first required before using the DI terminals.

DI delay

Each DI of VF-400-CINU+DCDC control module can be separately set the delay-on and delay-off with DI filter function. When the DI signal status holding time is shorter than the set time, the DI will keep the original status. The delay-on and delay-off time of each DI can be set through F19.00-F19.13.

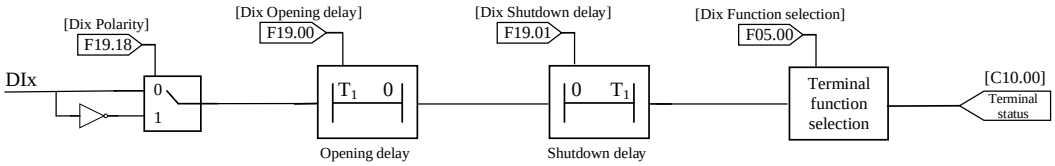

Figure 5-8 DI terminal processing

5.4.2 DO

The VF-400-CINU+DCDC control module supports 2 channels of HDO, 3 channels of RO as DO, 2 channels of HDO and 3-channel RO can be individually set DO delay-on and delay-off, and both can be processed with positive and negative logic via F19.29 and F19.30. When the negative logic is valid, logic 0 indicates that the output (normally open) is valid, and logic 1 indicates that the output (normally open) is invalid.

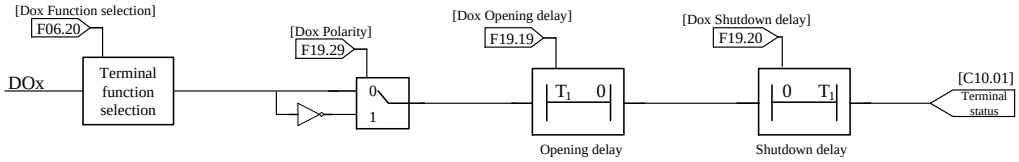

Figure 5-9 DO terminal processing

Note: C10.01-DO physical status (after delayed logic and inverse logic processing)

5.4.3 AI

The VF-400-CINU+DCDC control module supports 2 channels of AI for both current and voltage signals. Before using AI, determine firstly whether the external signal is a current signal or a voltage signal, and configure jumpers J7 and J8 accordingly and function codes F05.41 and F05.42 as well.

Table 5-10 Current and voltage signal input selection

Jumper J7: AI1 current and voltage signal input selection		
1 2 3	1, 2 shorted	AI1 voltage signal input
1 2 3	2, 3 shorted	AI1 current signal input
Jumper J8: AI2 current and voltage signal input selection		
1 2 3	1, 2 shorted	AI2 voltage signal input
1 2 3	2, 3 shorted	AI2 current signal input

AI functions as follows:

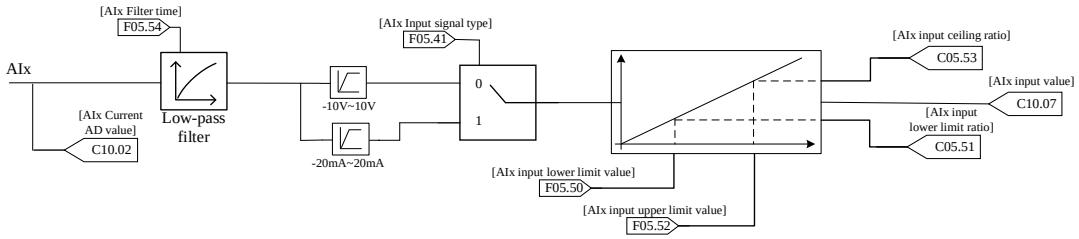

Figure 5-10 AI processing

The AI function parameters are listed below:

◆ Group F05.4x: AI type

Table 5-11 AI type parameters

Code (Address)	Name	Description
F05.41	AI1 signal type	0: voltage -10.00V~10.00V 1: current -20.00mA~20.00mA
F05.42	AI2 signal type	0: voltage -10.00V~10.00V 1: current -20.00mA~20.00mA
F05.43	AI curve selection	Ones-bit: AI1 Tens-bit: AI2 0: Straight line (default) 1: Curve 1 2: Curve 2

◆ Group F05.5x: AI linear parameters

Table 5-12 AI linear parameters

Code	Name	Description
F05.50	AI1 lower limit	Define the signal received at the AI1 terminal. The voltage signal below this value is processed as the lower limit.
F05.51	AI1 lower limit ratio	Set the percentage of the set value.
F05.52	AI1 upper limit	Define the signal received at the AI1 terminal. The voltage signal higher than this value is processed as the upper limit.
F05.53	AI1 upper limit ratio	Set the percentage of the set value.
F05.54	AI1 filter time	Define the size of the filter applied to the analog signal to remove interfering signals.
F05.55	AI2 lower limit	Define the signal received at the AI2 terminal. The voltage signal below this value is processed as the lower limit.
F05.56	AI2 lower limit ratio	Set the percentage of the set value.
F05.57	AI2 upper limit	Define the signal received at the AI2 terminal. The voltage signal higher than this value is processed as the upper limit.
F05.58	AI2 upper limit ratio	Set the percentage of the set value.
F05.59	AI2 filter time	Define the size of the filter applied to the analog signal to remove interfering signals.

◆ Group F05.6x: AI Curve 1

Table 5-13 AI Curve 1 parameters

Code	Name	Description
F05.60	Curve 1 lower limit	Set the lower limit for Curve 1
F05.61	Curve 1 lower limit percentage	Set the percentage of the set value
F05.62	Curve 1 inflection point1 input voltage	Set Curve 1 inflection point1 input voltage
F05.63	Curve 1 inflection point1 percentage	Set the percentage of the set value
F05.64	Curve 1 inflection point2 input voltage	Set Curve 1 inflection point1 input voltage

F05.65	Curve 1 inflection point2 percentage	Set the percentage of the set value
F05.66	Curve 1 upper limit	Set the upper limit for Curve 1
F05.67	Curve 1 upper limit percentage	Set the percentage of the set value

◆ Group F05.7x: AI Curve 2

Table 5-14 AI Curve 2 parameters

Code	Name	Description
F05.70	Curve 2 lower limit	Set the lower limit for Curve 2
F05.71	Curve 2 lower limit percentage	Set the percentage of the set value
F05.72	Curve 2 inflection point1 input voltage	Set Curve 2 inflection point1 input voltage
F05.73	Curve 2 inflection point1 percentage	Set the percentage of the set value
F05.74	Curve 2 inflection point2 input voltage	Set Curve 2 inflection point2 input voltage
F05.75	Curve 2 inflection point2 percentage	Set the percentage of the set value
F05.76	Curve 2 upper limit	Set the upper limit for Curve 2
F05.77	Curve 2 upper limit percentage	Set the percentage of the set value

5.4.4 AO

The VF-400-CINU+DCDC control module supports 2 channels of AO for both current and voltage signals. Before using AO, it is necessary to set the corresponding hardware jumpers J6 and J16, and configure the function codes F06.00 and F06.10.

Table 5-15 Current and voltage signal input selection

Jumper J6: AO1 current and voltage signal input selection		
1 2 3	1, 2 shorted	AO1 voltage signal input
1 2 3	2, 3 shorted	AO1 current signal input
Jumper J16: AO2 current and voltage signal input selection		
1 2 3	1, 2 shorted	AO2 voltage signal input
1 2 3	2, 3 shorted	AO2 current signal input

AO functions as follows:

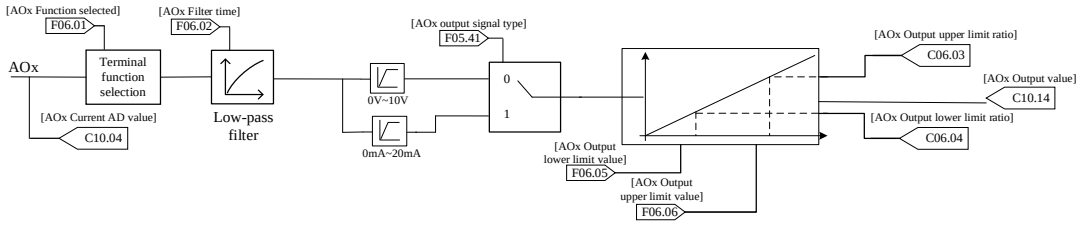

Figure 5-11 AO processing

The AO function parameters are shown in the following table:

◆ Group F06.0x: AO1 (analog output)

Table 5-16 AO1 parameter description

Code	Name	Description
F06.00	AO selection	0: 0V~10V 1: 0.00mA~20.00mA
F06.01	AO mode selection	0: given frequency 1: output frequency 2: output current 3: input voltage

		4: output voltage 5: mechanical speed 6: given torque 7: output torque 8: given via PID 9: PID feedback 10: output power 11: bus voltage 12: AI1 value 13: AI2 value 14: reserved 15: reserved 16: module temperature 1 17: module temperature 2 18: RS485 communication setting 19: vDO1 function
F06.02	AO1 filter	Set terminal AO1 filter time
F06.03	AO1 lower limit ratio	Set terminal AO1 lower limit ratio
F06.04	AO1 upper limit ratio	Set terminal AO1 upper limit ratio
F06.05	AO1 lower limit	Set terminal AO1 lower limit
F06.06	AO1 upper limit	Set terminal AO1 upper limit

◆ Group F06.1x: AO2 (analog output)

Table 5-17 AO2 parameter description

Code	Name	Description
F06.10	AO selection	0: 0V~10V 1: 0.00mA~20.00mA
F06.11	AO mode selection	0: given frequency 1: output frequency 2: output current 3: input voltage 4: output voltage 5: mechanical speed 6: given torque 7: output torque 8: given via PID 9: PID feedback 10: output power 11: bus voltage 12: AI1 value 13: AI2 value 14: reserved 15: reserved 16: module temperature 1 17: module temperature 2 18: RS485 communication setting 19: vDO1 function
F06.12	AO2 filter	Set terminal AO2 filter time

F06.13	AO2 lower limit ratio	Set terminal AO2 lower limit ratio
F06.14	AO2 upper limit ratio	Set terminal AO2 upper limit ratio
F06.15	AO2 lower limit	Set terminal AO2 lower limit
F06.16	AO2 upper limit	Set terminal AO2 upper limit

5.4.5 HDI

The VF-400-CINU+DCDC control module supports 2 channels of HDI signals, please refer to " VF-400-DCDC Converter Hardware Manual" for the detailed description of HDI.

HDI can be used as DI, when it is set to be used as DI, please refer to "5.4.1 DI" section for related parameter settings.

5.4.6 HDO

The VF-400-CINU+DCDC control module supports 2 channels of HDO signals, please refer to " VF-400-DCDC Converter Hardware Manual" for the detailed description of HDO.

HDO can be used as DO, when it is set to be used as DO, please refer to "5.4.2 DO" section for related parameter settings.

5.4.7 VF-400-BX

The E04/E05/E06 parameter group is for VF-400-Bx module enabling selection and specific configuration of DIO, RO, AI, AO, and the C10 group is for VF-400-Bx module status display.

Table 5-18 Relevant parameter description

Code	Description
E04.00 (E05.00, E06.00)	Set the VF-400-Bx module expansion slot position
E04.01 (E05.01, E06.01)	Set VF-400-Bx parameters
E04.02~E04.15 (E05.02~E05.15, E06.02~E06.15)	Set DIO, RO signal source, positive and negative logic, turn-on time, turn-off time
E04.20~E04.32 (E05.20~E05.32, E06.20~E06.32)	Set AI type, AI curve parameters, AI filter time
E04.40~E04.53 (E05.40~E05.53, E06.40~E06.53)	Set AO signal source, AO type, and AO curve parameters
C10.20	Display IO module online status
C10.21~C10.22	Display DIO physical status
C10.26~C10.27 (C10.46~C10.47, C10.66~C10.67)	Display the current AD value of AI
C10.28~C10.29 (C10.48~C10.49, C10.68~C10.69)	Display the current AD value of AO
C10.30~C10.35 (C10.50~C10.55, C10.70~C10.75)	Display AI type, input value, and input scale
C10.36~C10.43 (C10.56~C10.63, C10.76~C10.83)	Display AO type, signal source, output value, output ratio

Note: Function selection of AI type and AO type should be matched with the hardware jumper.

- DIO and RO

Before using the DIO terminals, please refer to the VF-400-B4 IO Expansion Module Manual for hardware wiring.

Take VF-400-B4 as an example for specific explanation. When E04.00=1, configure DIO1 and DIO2 as DI or DO through parameter code E04.01. When E04.01 is selected to be used as DI, the DI signal will activate on-delay, off-delay, positive and negative logic processing; when E04.01 is selected to be used as DO, the DO signal source will be set up through parameter codes E04.04 and E04.05, and the DO signal will activate on-delay, off-delay, positive and negative logic processing in turn.

The DIO function parameters are listed below:

Table 5-19 DI, DO, RO function settings

Code	Name	Description
E04.00	Slot selection	0: not enabled 1: slotA1 2: slotA2 3: slotA3 4~ 6: slotB1~B3 7~ 9: slotC1~C3 10: FDDI
E04.01	x1DIO configuration	bit0: 0: DIO1 as DI 1: DIO1 as DO bit1: 0: DIO2 as DI 1: DIO2 as DO
E04.02	x1DI1 function selection	See the function of terminal DI
E04.03	x1DI2 function selection	See the function of terminal DI
E04.04	x1DO1 signal source	See the function of terminal DO
E04.05	x1DO2 signal source	See the function of terminal DO
E04.06	x1 relay output signal source	See the function of terminal DO
E04.07	x1DO1 positive and negative logic	0: forward 1: reverse
E04.08	x1DO2 positive and negative logic	0: forward 1: reverse
E04.09	x1 relay output positive and negative logic	0: forward 1: reverse
E04.10	x1DIO1 on-delay	Set x1DIO1 on-delay
E04.11	x1DIO1 off-delay	Set x1DIO1 off-delay
E04.12	x1DIO2 on-delay	Set x1DIO2 on-delay
E04.13	x1DIO2 off-delay	Set x1DIO2 off-delay
E04.14	x1 relay on-delay	Set x1 relay on-delay
E04.15	x1 relay off-delay	Set x1 relay off-delay

- AI

Take VF-400-B4 as an example for specific explanation, VF-400-B4 supports 2 channels of AI for both current and voltage signals. Before using AI, it's necessary to determine whether the external signal is a current signal or a voltage signal, and select the corresponding hardware jumper (see " VF-400-B4 IO Expansion Module Manual" for details), and when E04.00=1, configure it through the function code E04.20/E04.21 accordingly, and then the AI function can be realized as the following function diagram, see "5.4.3 AI".

The AI function parameters are listed below:

Table 5-20 AI function setting

Code	Name	Description
E04.20	AI1 type	0: -10.00V~10.00V 1: -20.00mA~20.00mA
E04.21	AI2 type	0: -10.00V~10.00V 1: -20.00mA~20.00mA
E04.22	AI curve selection	Ones-bit: AI1 Tens-bit: AI2

		Hundreds-bit: reserved Thousands-bit: reserved 0: straight line (default) 1: Curve 1 2: Curve 2
E04.23	AI1 lower limit	Set AI1 lower limit
E04.24	AI1 lower limit ratio	Set AI1 lower limit ratio
E04.25	AI1 upper limit	Set AI1 upper limit
E04.26	AI1 upper limit ratio	Set AI1 upper limit ratio
E04.27	AI1 filter time	Set AI1 time
E04.29	AI2 lower limit ratio	Set AI2 lower limit ratio
E04.30	AI2 upper limit	Set AI2 upper limit
E04.31	AI2 upper limit ratio	Set AI2 upper limit ratio
E04.32	AI2 filter time	Set AI2 filter time

- AO

Take VF-400-B4 as an example for specific explanation, VF-400-B4 supports 2 channels of AO for both current and voltage signals. Before using AO, it's necessary to set the corresponding hardware jumper (see "VF-400-B4 IO Expansion Module Manual"), and when E04.00=1, configure the function code E04.40/E04.47. Please refer to the chapter of "5.4.4 AO" for the function block diagram.

The AO function parameters are listed below:

Table 5-14 AO function setting

Code	Name	Content
E04.40 (0x2428)	AO1 type	0: 0.00V~10.00V 1: 0.0mA~20.00mA
E04.41	AO1 source	0: given frequency 1: output frequency 2: output current 3: input voltage 4: output voltage 5: mechanical speed 6: given torque 7: output torque 8: given via PID 9: PID feedback 10: output power 11: bus voltage 12: AI1 value 13: AI2 value 14: reserved 15: reserved 16: module temperature 1 17: module temperature 2

		18: RS485 communication setting 19: vDO1 function
E04.42	AO1 filter time	Set AO1 filter time
E04.43	AO1 lower limit ratio	Set AO1 lower limit ratio
E04.44	AO1 upper limit ratio	Set AO1 upper limit ratio
E04.45	AO1 lower limit	Set AO1 lower limit
E04.46	AO1 upper limit	Set AO1 upper limit
E04.47	AO2 type	0: 0.00V~10.00V 1: 0.00mA~20.00mA
E04.48	AO2 source	0: given frequency 1: output frequency 2: output current 3: input voltage 4: output voltage 5: mechanical speed 6: given torque 7: output torque 8: given via PID 9: PID feedback 10: output power 11: bus voltage 12: AI1 value 13: AI2 value 14: reserved 15: reserved 16: module temperature 1 17: module temperature 2 18: RS485 communication setting 19: vDO1 function
E04.49	A02 output filter time	Set AO2 output filter time
E04.50	AO2 output lower limit ratio	Set AO2 output lower limit ratio
E04.51	AO2 output upper limit ratio	Set AO2 output upper limit ratio
E04.52	AO2 output lower limit	Set AO2 output lower limit
E04.53	AO2 output upper limit	Set AO2 output upper limit

Chapter 6 Parameter and Function Code

This chapter provides a detailed description of the function codes and parameters.

6.1 Parameter List

- Types of parameters for this product

Code	Name	Code	Name
F00.0x	Environment setting mode	F10.5x	Fault recovery and motor overload protection
F00.1x-F00.3x	Common parameters	F12.0x	Modbus card parameter
F05.0x	Digital input terminal function	F12.2x	RJ45 parameter
F05.2x	Terminal operation control	F12.3x	PROFIBUS-DP parameter
F05.4x	AI type processing	F12.4x	CANopen parameter
F05.5x	AI linear processing	F12.5x	HSCom parameter
F05.6x	AI Curve 1 processing	F19.xx	DIO physical operation parameter
F05.7x	AI Curve 2 processing	F28.xx	Rectifier
F05.8x	AI as digital input terminal	F29.xx	Fault message monitoring parameter
F06.0x	AO1	E04.xx	IO module 1
F06.1x	AO2	E05.xx	IO module 2
F06.2x	Digital, relay output	E06.xx	IO module 3
F06.4x	Frequency detection	E06.xx	Black box function
F06.5x	Monitor parameter comparator output	C00.xx	Basic parameter monitoring
F06.6x-F06.7x	Virtual I/O terminal	C01.xx	Fault record monitoring
F10.0x	Current protection	C03.xx	Maintenance monitoring
F10.1x	Voltage protection	C07.xx	Factory monitoring
F10.2x	Subsidiary protection	C08.xx	Drive information monitoring
F10.3x	Load detection protection	C10.xx	IO parameter monitoring
F10.4x	Stall protection	C12.xx	VF-400-DCDT card information and rectifier-specific parameter monitoring

6.1.1 Group F00: Environmental Applications

- Group F00.0x: environment setting

Code (Address)	Name	Content	Factory value (Range)	Adjustable properties
F00.00 (0x0000)	Parameter access level	Set the parameter access level according to the restriction of parameter access 0: standard parameter (Fxx.yyy, Cxx.yyy) 1: common parameter (F00.00, Pxx.yyy) 2: monitoring parameter (F00.00, Cxx.yyy) 3: changed parameter (F00.00, Hxx.yy)	0 (0~3)	RUN
F00.01 (0x0001)	Application selection	0: general-purpose 1: fan, pump 2: machine tool 3: punching machine 4: wire drawing machine 5: conveyor belt	0 (0~1)	STOP
F00.02 (0x0002)	Motor selection	0: motor 1 1: motor 2	0 (0~1)	STOP

F00.03 (0x0003)	Initialization	Set the drive initialization mode 0: not Initialization 11: set parameters according to actual needs (motor parameters are not included) 22: all parameters initialized 33: clear fault records xx: add recovery by group	0 (0~xx)	STOP
F00.04 (0x0004)	Keyboard parameter copy	0: none 11: upload parameters to keyboard 22: download parameters to the drive	0 (0~30)	STOP
F00.05 (0x0005)	User passwords	Set user passwords	0x0000 (0x0000~0xFFFF)	STOP
F00.06 (0x0006)	RTC year	Set time display (year)	0 (21~99)	STOP
F00.07 (0x0007)	RTC month/day	Set time display (month, day)	0.00 (0.00~12.31)	STOP
F00.08 (0x0008)	RTC hour/minute	Set time display (hour, minute)	0.00 (0.00~23.59)	STOP
F00.09 (0x0009)	RTC second	Set time display (second)	0 (0~59)	STOP

- Group F00.1x~F00.3x: common parameter setting

Code (Address)	Name	Content	Factory value (Range)	Adjustable properties
F00.10~F00.39 (0x0010~0x0027)	Set addresses for common parameters	Ones-and tens-bit: set parameter 00~99 to yy in Fxx.yy Hundreds- and thousands-bit: set parameter 00~31 to xx in Fxx.yy	On F00.01 (0x0000~0x2999)	RUN

- Group F00.41~F00.43: working environment setting

Code (Address)	Name	Content	Factory value (Range)	Adjustable properties
F00.41 (0x0029)	Load mode	0: heavy overload 1: light overload 2: no overload	0 (0~2)	STOP
F00.42 (0x002A)	Altitude	Set altitude which will affect the overload derating curve of the drive, please refer to “VF-400-DCDC Converter Software Manual” for details	0m (0m~4000m)	STOP
F00.43 (0x002B)	Environment temperature	Set environment temperature	25.0℃ (0.0℃~60.0℃)	STOP

6.1.2 Group F05: Input Terminal

- Group F05.0x: digital input terminal setting

Code (Address)	Name	Content	Factory value (Range)	Adjustable properties
F05.00 (0x0500)	DI1 functions	See the function of terminal DI	1 (0~95)	STOP
F05.01 (0x0501)	DI2 functions	See the function of terminal DI	2 (0~95)	STOP
F05.02 (0x0502)	DI3 functions	See the function of terminal DI	4 (0~95)	STOP

F05.03 (0x0503)	DI4 functions	See the function of terminal DI	5 (0~95)	STOP
F05.04 (0x0504)	DI5 functions	See the function of terminal DI	6 (0~95)	STOP
F05.05 (0x0505)	DI6 functions	See the function of terminal DI	0 (0~95)	STOP
F05.06 (0x0506)	DI7 function	See the function of terminal DI	0 (0~95)	STOP
F05.07 (0x0507)	HDI1 function	See the function of terminal DI for details	0 (0~95)	STOP
F05.08 (0x0508)	HDI2 function	See the function of terminal DI for details	0 (0~95)	STOP

- Group F05.2x: digital input terminal setting

Code (Address)	Name	Content	Factory value (Range)	Adjustable properties
F05.20 (0x0514)	Terminal-controlled operation mode	0: two-line 1 1: two-line 2 2: three-line 1 3: three-line2	0 (0~3)	STOP
F05.25 (0x0519)	Terminal UP/DW control	0: power-down frequency storage 1: no power-down without frequency storage 2: adjustable during operation, zeroed after shutdown	0 (0~2)	STOP
F05.26 (0x051A)	Terminal UP/DW controlled frequency increase/decrease rate	Set terminal UP/DW controlled frequency increase/decrease rate	0.50Hz/s (0.01Hz/s~50.00Hz/s)	RUN
F05.27 (0x051B)	Terminal emergency stop deceleration time	Set terminal emergency stop deceleration time	1.00s (0.01s~650.00s)	RUN

- Group F05.4x: AI type processing

Code (Address)	Name	Content	Factory value (Range)	Adjustable properties
F05.41 (0x0529)	AI1 signal type	0: voltage -10.00V~10.00V 1: current-20.00mA~20.00mA	0 (0~1)	RUN
F05.42 (0x052A)	AI2 signal type	0: voltage -10.00V~10.00V 1: current-20.00mA~20.00mA	0 (0~1)	RUN
F05.43 (0x052B)	AI curve	Ones-bit: AI1 Tens-bit: AI2 0: straight line (default) 1: Curve 1 2: Curve 2	0x0000 (0x0000~0x0022)	RUN

- Group F05.5x: AI linear processing

Code (Address)	Name	Content	Factory value (Range)	Adjustable properties
F05.50 (0x0532)	AI1 lower limit	Define the signal received at the AI1 terminal. The voltage signal below this value is processed as the lower limit.	-10.000% (-20.000%~20.000%)	RUN
F05.51 (0x0533)	AI1 lower limit ratio	Set the percentage of the set value.	100.00% (-300.00%~300.00%)	RUN

F05.52 (0x0534)	AI1 upper limit	Define the signal received at the AI1 terminal. The voltage signal higher than this value is processed as the upper limit.	10.000% (-20.000%~20.000%)	RUN
F05.53 (0x0535)	AI1 upper limit ratio	Set the percentage of the set value.	100.00% (-300.00%~300.00%)	RUN
F05.54 (0x0536)	AI1 filter time	Define the size of the filter applied to the analog signal to remove interfering signals.	0.010s (0.000s~6.000s)	RUN
F05.55 (0x0537)	AI2 lower limit	Define the signal received at the AI2 terminal. The voltage signal below this value is processed as the lower limit.	-10.000% (-20.000%~20.000%)	RUN
F05.56 (0x0538)	AI2 lower limit ratio	Set the percentage of the set value.	100.00% (-300.00%~300.00%)	RUN
F05.57 (0x0539)	AI2 upper limit	Define the signal received at the AI2 terminal. The voltage signal higher than this value is processed as the upper limit.	10.000% (-20.000%~20.000%)	RUN
F05.58 (0x053A)	AI2 upper limit ratio	Set the percentage of the set value.	100.00% (-300.00%~300.00%)	RUN
F05.59 (0x053B)	AI2 filter time	Define the size of the filter applied to the analog signal to remove interfering signals.	0.010s (0.000s~6.000s)	RUN

- Group F05.6x: AI Curve 1 processing

Code (Address)	Name	Content	Factory value (Range)	Adjustable properties
F05.60 (0x053C)	Curve 1 lower limit	Set the lower limit for Curve 1	0.0% (0.0%~100.0%)	RUN
F05.61 (0x053D)	Curve 1 lower limit setting	Set the percentage of the set value	0.00% (0.00%~100.00%)	RUN
F05.62 (0x053E)	Curve 1 inflection position 1input voltage	Set Curve 1 inflection position 1input voltage	30.0% (0.0%~100.0%)	RUN
F05.63 (0x053F)	Curve 1 inflection position 1setting	Set the percentage of the set value	30.00% (0.00%~100.00%)	RUN
F05.64 (0x0540)	Curve 1 inflection position 2 input voltage	Set Curve 1 inflection position 2 input voltage	60.0% (0.0%~100.0%)	RUN
F05.65 (0x0541)	Curve 1 inflection position 2 setting	Set the percentage of the set value	60.00% (0.00%~100.00%)	RUN
F05.66 (0x0542)	Curve 1 upper limit	Set the upper limit for Curve 1	100.0% (0.0%~100.0%)	RUN
F05.67 (0x0543)	Curve 1 upper limit setting	Set the percentage of the set value	100.00% (0.00%~100.00%)	RUN

- Group F05.7x: AI Curve 2 processing

Code (Address)	Name	Content	Factory value (Range)	Adjustable properties
F05.70 (0x0546)	Curve 2 lower limit	Set the lower limit for Curve 2	0.0% (0.0%~100.0%)	RUN
F05.71 (0x0547)	Curve 2 lower limit setting	Set the percentage of the set value	0.00% (0.00%~100.00%)	RUN
F05.72 (0x0548)	Curve 2 inflection point1 input voltage	Set Curve 2 inflection point1 input voltage	30.0% (0.0%~100.0%)	RUN
F05.73 (0x0549)	Curve 2 inflection point1setting	Set the percentage of the set value	30.00% (0.00%~100.00%)	RUN
F05.74	Curve 2 inflection point2	Set Curve 2 inflection point2 input voltage	60.0%	RUN

(0x054A)	input voltage		(0.0%~100.0%)	
F05.75 (0x054B)	Curve 2 inflection point2 setting	Set the percentage of the set value	60.00% (0.00%~100.00%)	RUN
F05.76 (0x054C)	Curve 2 upper limit	Set the upper limit for Curve 2	100.0% (0.0%~100.0%)	RUN
F05.77 (0x054D)	Curve 2 upper limit setting	Set the percentage of the set value	100.00% (0.00%~100.00%)	RUN

- Group F05.8x: AI as digital input terminal

Code (Address)	Name	Content	Factory value (Range)	Adjustable properties
F05.80 (0x0550)	AI for DI terminal characteristic	0: valid at low level 1: valid at high level Ones-bit: AI1 Tens-bit: AI2	0x0000 (0x0000~0x1111)	RUN
F05.81 (0x0551)	AI1 terminal function selection (as DI terminal)	See DI terminal functions	0 (0~95)	STOP
F05.82 (0x0552)	AI1 high level setting	Any value beyond this setting is considered as high level	70.00% (0.00%~100.00%)	RUN
F05.83 (0x0553)	AI1 low level setting	Any value below this setting is considered as low level	30.00% (0.00%~100.00%)	RUN
F05.84 (0x0554)	AI2 terminal function selection (as DI terminal)	See DI terminal functions	0 (0~95)	STOP
F05.85 (0x0555)	AI2 high level setting	Any value beyond this setting is considered as high level	70.00% (0.00%~100.00%)	RUN
F05.86 (0x0556)	AI2 low level setting	Any value below this setting is considered as low level	30.00% (0.00%~100.00%)	RUN

6.1.3 Group F06: Output Terminal

- Group F06.0x: AO1

Code (Address)	Name	Content	Factory value (Range)	Adjustable properties
F06.00 (0x0600)	AO selection	0: 0V~10V 1: 0.00mA~20.00mA	0 (0~1)	RUN
F06.01 (0x0601)	AO mode selection	0: given frequency 1: output frequency 2: output current 3: input voltage 4: output voltage 5: mechanical speed 6: given torque 7: output torque 8: given via PID 9: PID feedback 10: output power 11: bus voltage 12: AI1 input value 13: AI2 input value 14: reserved	0 (0~19)	RUN

		15: reserved 16: module temperature 1 17: module temperature 2 18: RS485 communication setting 19: vDO1 function		
F06.02 (0x0602)	AO1 filter time	Set terminal AO1 filter time	0.010s (0.000s~6.000s)	RUN
F06.03 (0x0603)	AO1 lower limit ratio	Set terminal AO1 lower limit ratio	0.0% (-600.0%~600.0%)	RUN
F06.04 (0x0604)	AO1 upper limit ratio	Set terminal AO1 upper limit ratio	100.0% (-600.0%~600.0%)	RUN
F06.05 (0x0605)	AO1 lower limit	Set terminal AO1 lower limit	0.000 (0.000~20.000)	RUN
F06.06 (0x0606)	AO1 upper limit	Set terminal AO1 upper limit	10.000 (0.000~20.000)	RUN

- Group F06.1x: AO2

Code (Address)	Name	Content	Factory value (Range)	Adjustable properties
F06.10 (0x060A)	AO selection	0: 0V~10V 1: 0.00mA~20.00mA	0 (0~1)	RUN
F06.11 (0x060B)	AO mode selection	0: given frequency 1: output frequency 2: output current 3: input voltage 4: output voltage 5: mechanical speed 6: given torque 7: output torque 8: given via PID 9: PID feedback 10: output power 11: bus voltage 12: AI1 input value 13: AI2 input value 14: reserved 15: reserved 16: module temperature 1 17: module temperature 2 18: RS485 communication setting 19: vDO1 function	0 (0~19)	RUN
F06.12 (0x060C)	AO2 filter	Set terminal AO2 filter time	0.010s (0.000s~6.000s)	RUN
F06.13 (0x060D)	AO2 lower limit ratio	Set terminal AO2 lower limit ratio	0.0% (-600.0%~600.0%)	RUN
F06.14 (0x060E)	AO2 upper limit ratio	Set terminal AO2 upper limit ratio	100.0% (-600.0%~600.0%)	RUN
F06.15	AO2 lower limit	Set terminal AO2 lower limit	0.000	RUN

(0x060F)			(0.000~20.000)	
F06.16 (0x0610)	AO2 upper limit	Set terminal AO2 upper limit	10.000 (0.000~20.000)	RUN

- Group F06.2x: digital, relay output

Code (Address)	Name	Content	Factory value (Range)	Adjustable properties
F06.20 (0x0614)	HDO1 signal source	See terminal DO functions	0 (0~63)	RUN
F06.21 (0x0615)	HDO2 signal source	See terminal DO functions	0 (0~63)	RUN
F06.22 (0x0616)	RDO1 signal source	See terminal DO functions	0 (0~63)	RUN
F06.23 (0x0617)	RDO2 signal source	See terminal DO functions	0 (0~63)	RUN
F06.24 (0x0618)	RDO3 signal source	See terminal DO functions	0 (0~63)	RUN

- Group F06.4x: frequency detection

Code (Address)	Name	Content	Factory value (Range)	Adjustable properties
F06.40 (0x0628)	Frequency detection value 1	Set frequency detection value 1	2.00Hz (0.00Hz~ Max. frequency)	RUN
F06.41 (0x0629)	Set frequency detection range1	Set frequency detection range1	1.00Hz (0.00Hz~ Max. frequency)	RUN
F06.42 (0x062A)	Frequency detection value 2	Set frequency detection value 2	2.00Hz (0.00Hz~ Max. frequency)	RUN
F06.43 (0x062B)	Frequency detection range2	Set frequency detection range2	1.00Hz (0.00Hz~ Max. frequency)	RUN
F06.44 (0x062C)	Detection amplitude of the given frequency	Set the detection amplitude of the given frequency	2.00Hz (0.00Hz~ Max. frequency)	RUN

- Group F06.5x: monitor parameter comparator output

Code (Address)	Name	Content	Factory value (Range)	Adjustable properties
F06.50 (0x0632)	Comparator 1 monitor selection	Ones- and tens-bit: set monitor parameter 00~63 to yy in Cxx.yy 00~63 Hundreds and thousands-bit: set monitor parameter 00~07 to xx in Cxx.yy	0x0001 (0x0000~0x0763)	RUN
F06.51 (0x0633)	Comparator 1 upper limit	Set comparator 1 upper limit	(up to F06.50)	RUN
F06.52 (0x0634)	Comparator 1 lower limit	Set comparator 1 lower limit	(up to F06.50)	RUN
F06.53 (0x0635)	Comparator 1 offset	Set comparator 1 offset value	(up to F06.50)	RUN
F06.54 (0x0636)	Operation selection when sending CP1	0: continue operation (digital terminal output only) 1: report an alarm and free stop	0 (0~3)	RUN

		2: report a warning and continue running 3: forced stop		
F06.55 (0x0637)	Comparator 2 monitor selection	Ones- and tens-bit: set monitor parameter 00~63 to yy in Cxx.yy 00~63 Hundreds and thousands-bit: set monitor parameter 00~07 to xx in Cxx.yy	0x0002 (0x0000~0x0763)	RUN
F06.56 (0x0638)	Comparator 2 upper limit	Set comparator 2 upper limit	(up to F06.55)	RUN
F06.57 (0x0639)	Comparator 2 lower limit	Set comparator 2 lower limit	(up to F06.55)	RUN
F06.58 (0x063A)	Comparator 2 offset	Set comparator 2 offset value	(up to F06.55)	RUN
F06.59 (0x063B)	Operation selection when sending CP2	0: continue operation (digital terminal output only) 1: report an alarm and free stop 2: report a warning and continue running 3: forced stop	0 (0~3)	RUN

- Group F06.6x~Group F06.7x: virtual input/output terminal

Code (Address)	Name	Content	Factory value (Range)	Adjustable properties
F06.60 (0x063C)	vDI1 terminal function	See terminal DI functions	0 (0~95)	RUN
F06.61 (0x063D)	vDI2 terminal function	See terminal DI functions	0 (0~95)	RUN
F06.62 (0x063E)	vDI3 terminal function	See terminal DI functions	0 (0~95)	RUN
F06.63 (0x063F)	vDI4 terminal function	See terminal DI functions	0 (0~95)	RUN
F06.64 (0x0640)	vDI valid status source	0: internal connection with virtual vDOn 1: connection with physical terminal DIn 2: function code setting valid or not Ones-bit: vDI1 Tens-bit: vDI2 Hundreds-bit: vDI3 Thousands-bit: vDI4	0x0000 (0x0000~0x2222)	RUN
F06.65 (0x0641)	vDI valid status	0: invalid 1: valid Ones-bit: vDI1 Tens-bit: vDI2 Hundreds-bit: vDI3 Thousands-bit: vDI4	0x0000 (0x0000~0x1111)	RUN
F06.66 (0x0642)	vDO1 selection	See terminal DO functions	0 (0~63)	RUN
F06.67 (0x0643)	vDO2 selection	See terminal DO functions	0 (0~63)	RUN
F06.68 (0x0644)	vDO3 selection	See terminal DO functions	0 (0~63)	RUN
F06.69	vDO4 selection	See terminal functions	0	RUN

(0x0645)			(0~63)	
F06.70 (0x0646)	vDO1 on-delay time	Set vDO1 on-delay time	0.010s (0.000s~60.000s)	RUN
F06.71 (0x0647)	vDO2 on-delay time	Set vDO2 on-delay time	0.010s (0.000s~60.000s)	RUN
F06.72 (0x0648)	vDO3 on-delay time	Set vDO3 on-delay time	0.010s (0.000s~60.000s)	RUN
F06.73 (0x0649)	vDO4 on-delay time	Set vDO4 on-delay time	0.010s (0.000s~60.000s)	RUN
F06.74 (0x064A)	vDO1 off-delay time	Set vDO1 off-delay time	0.010s (0.000s~60.000s)	RUN
F06.75 (0x064B)	vDO2 off-delay time	Set vDO2 off-delay time	0.010s (0.000s~60.000s)	RUN
F06.76 (0x064C)	vDO3 off-delay time	Set vDO3 off-delay time	0.010s (0.000s~60.000s)	RUN
F06.77 (0x064D)	vDO4 off-delay time	Set vDO4 off-delay time	0.010s (0.000s~60.000s)	RUN

6.1.4 Group F10: Protection Parameters

- Group F10.0x: current protection

Code (Address)	Name	Content	Factory value (Range)	Adjustable properties
F10.00 (0x0A00)	Overcurrent suppression	Auto limit the output current below the set overcurrent suppression point to prevent overcurrent faults triggered by excessive current. 0: suppression on 1: suppression on during acceleration and deceleration and off during constant speed	0 (0~1)	RUN
F10.01 (0x0A01)	Overcurrent suppression point	Set load current limit level, 100% of the motor rated current	160.0% (0.0%~300.0%)	RUN
F10.02 (0x0A02)	Overcurrent suppression gain	Set the response effect of overcurrent suppression	100.0% (0.0%~500.0%)	RUN
F10.04 (0x0A04)	Current protection setting 2	Set current-related protection on/off Ones-bit: three-phase current protection 0: off 1: on Tens-bit: three-phase current imbalance protection 0: off 1: on Hundreds-bit: reserved Thousands-bit: reserved	0x0001 (0x0000~0x0011)	STOP
F10.05 (0x0A05)	Current imbalance judgment threshold	The ratio of the largest to the smallest phase of the three-phase current, used to judge current imbalance faults by comparing it with the set value.	160% (0%~500%)	STOP
F10.06 (0x0A06)	Current imbalance filter coefficient	Increase this parameter under high current fluctuation.	2.0s (0.0s~60.0s)	STOP

- Group F10.1x: voltage protection

Code (Address)	Name	Content	Factory value (Range)	Adjustable properties
F10.11 (0x0A0B)	Busbar overvoltage suppression	If the bus voltage is higher than the overvoltage suppression point, acceleration and deceleration will be slowed down or stopped to prevent overvoltage faults. Ones-bit: overvoltage suppression 0: off 1: on Tens-bit: over excitation 0: off 1: on during deceleration 2: on during operation	0x0011 (0x0000~0x0021)	STOP
F10.12 (0x0A0C)	Busbar overvoltage suppression point	Set bus voltage value to trigger the overvoltage suppression function.	T3: 750V S2: 370V (0V~ overvoltage point) T3 overvoltage point: 820V S2 overvoltage point: 400V	STOP
F10.13 (0x0A0D)	Bus overvoltage suppression gain	Set the response effect of overvoltage suppression.	100.0% (0.0%~500.0%)	RUN
F10.14 (0x0A0E)	Dynamic brake	Sets dynamic brake on or off 0: off 1: on, with overvoltage suppression off 2: on, with overvoltage suppression on	2 (0~2)	RUN
F10.15 (0x0A0F)	Dynamic brake voltage	Set the dynamic brake voltage to start when the bus voltage is higher than this value.	T3: 740V S2: 360V (0V~ overvoltage point) T3 overvoltage point: 820V S2 overvoltage point: 400V	RUN
F10.16 (0x0A10)	Bus undervoltage suppression	Auto adjust the operation frequency when the bus voltage is lower than the under-voltage suppression point value to prevent under-voltage faults. 0: off 1: on	0 (0~1)	STOP
F10.17 (0x0A11)	Busbar undervoltage suppression point	Set bus voltage value to trigger the undervoltage suppression function	T3: 430V S2: 240V (0V~ overvoltage point) T3 overvoltage point: 820V S2 overvoltage point: 400V	STOP
F10.18 (0x0A12)	Bus undervoltage suppression gain	Set the response effect of undervoltage suppression	100.0% (0.0%~500.0%)	RUN
F10.19 (0x0A13)	Busbar undervoltage protection point	Set the lower limit voltage of the busbar voltage allowed, report undervoltage fault when below this value	T3: 320V S2: 190V (0V~ overvoltage point) T3 overvoltage point: 820V S2 overvoltage point: 400V	STOP

- Group F10.2x: auxiliary protection

Code (Address)	Name	Content	Factory value (Range)	Adjustable properties
F10.20 (0x0A14)	I/O phase loss protection	Set I/O phase loss protection function on or off. Ones-bit: output out-of-phase 0: off 1: on Tens-bit: input phase loss protection function 0: off 1: on, report a warning when input phase failure is detected, continue to run 2: on, report an error when input phase failure is detected, free stop Hundreds-bit: reserved Thousands-bit: reserved	0x0021 (0x000~0x1121)	STOP
F10.21 (0x0A15)	Input phase loss threshold	Set voltage detection percentage for the input phase loss detection, 100% of the rated bus voltage.	10.0% (0.0%~30.0%)	STOP
F10.22 (0x0A16)	Grounded short circuit protection	Set drive output and cooling fan to ground short circuit protection on/off Ones-bit: output to ground short circuit protection 0: off 1: on 2: detect before operation Tens-bit: fan to ground short circuit protection 0: off 1: on Hundreds-bit: reserved Thousands-bit: reserved	0x0011 (0x0000~0x0112)	STOP
F10.23 (0x0A17)	Fan on/off	Set the drive cooling fan operation mode. 0: fan runs after the drive is powered up 1: fan runs according to temperature after shutdown 2: fan runs for the set time of F10.24 according to temperature after shutdown	1 (0~2)	RUN
F10.24 (0x0A18)	Fan delay time	Set the time from running command releasing to cooling fan stopping	30.00s (0.00s~600.00s)	STOP
F10.25 (0x0A19)	AC drive overheat oH1 warning level	Set the value for overheating warning of the drive, and report the overheating error when above this value.	80.0℃ (0.0℃~100.0℃)	RUN
F10.26 (0x0A1A)	Motor overheat protection selection (expansion card)	Set the function related to motor overheat protection using the IO expansion card. Ones-bit: motor temperature sensor type 0: PT1000 1: KTY84 IO expansion card dip switch to KTY, F10.26 is valid. IO expansion card dip switch to PT100, PT100 sensor is valid.	0x0001 (0x0000~0x0001)	RUN
F10.27 (0x0A1B)	Motor overheat error level (expansion card)	Set the value for overheating error of the drive, report the overheating error when above this value.	110.0℃ (0.0℃~200.0℃)	RUN
F10.28 (0x0A1C)	Motor overheat warning level (expansion card)	Set the value for overheating warning of the drive, and report the overheating warning when above this value.	90.0℃ (0.0℃~F10.27)	RUN

- Group F10.3x: load protection

Code (Address)	Name	Content	Factory value (Range)	Adjustable properties
F10.32 (0x0A20)	Load detection setting	Set the drive load detection mode and the warning mode at this time. Ones-bit: load detection1 setting 0: detection off 1: detect overload 2: detect overload only at constant speed 3: detect underload 4: detect underload at constant speed only Tens-bit: warning setting of load detection1 0: continue to run, report load protection1 1: free stop, report load protection Hundreds-bit: load detection2 setting 0: detection off 1: detect overload 2: detect overload only at constant speed 3: detect underload 4: detect underload at constant speed only Thousands-bit: warning setting of load detection2 0: continue to run, report load protection2 1: free stop, report load protection	0x0000 (0x0000~0x1414)	STOP
F10.33 (0x0A21)	Load detection warning 1	Set the load value for warning1. For V/F control, 100% of the rated motor current. For vector control, 100% of the motor rated output torque.	130.0% (0.0%~200.0%)	STOP
F10.34 (0x0A22)	Load detection warning time 1	Set the duration of load detection1, if the load is higher than the load warning detection level for the set time, report load warning1.	5.0s (0.0s~60.0s)	STOP
F10.35 (0x0A23)	Load warning detection level 2	Set the load detection value for warning2. For V/F control, 100% of the rated motor current. For vector control, 100% of the motor rated output torque.	30.0% (0.0%~200.0%)	STOP
F10.36 (0x0A24)	Load warning detection time2	Set the duration of load detection2, if the load is higher than the load warning detection level for the set time, report load warning2.	5.0s (0.0s~60.0s)	STOP

- Group F10.4x: stall protection

Code (Address)	Name	Content	Factory value (Range)	Adjustable properties
F10.40 (0x0A28)	Excessive speed deviation protection	Set the detection mode and warning mode of excessive deviation between the motor's given speed and the feedback speed. Ones-bit: detection selection 0: detection off 1: detect only at constant speed 2: detect on Tens-bit: warning selection 0: free stop and report error 1: report the warning and continue running	0x0000 (0x0000~ 0x0012)	STOP
F10.41 (0x0A29)	Excessive speed deviation detection threshold	Set the detection value for excessive speed deviation, 100% of F01.10 [Maximum frequency].	10.0% (0.0%~ 60.0%)	STOP
F10.42 (0x0A2A)	Excessive speed deviation detection time	Set the time for excessive speed deviation detection. If the deviation between the given speed and the feedback speed is greater than F10.41 for this time, report excessive speed deviation warning.	2.0s (0.0s~ 60.0s)	STOP
F10.43 (0x0A2B)	Stall protection	Set the detection mode selection and warning mode of stall. Ones-bit: detection selection 0: detection off 1: detect only at constant speed 2: detect all the time Tens-bit: warning selection 0: free stop and report error 1: report the warning and continue running	0x0002 (0x0000~ 0x0012)	STOP
F10.44 (0x0A2C)	Stall detection threshold	Set the value of the stall detection, 100% of F01.10 [Maximum frequency].	110.0% (0.0%~ 150.0%)	STOP
F10.45 (0x0A2D)	Stall detection time	Set the duration of stall detection, if the feedback speed is higher than F10.44 and lasts for the set time, report the stall warning.	0.100s (0.000s~ 2.000s)	STOP

- Group F10.5x: fault recovery protection and motor overload

Code (Address)	Name	Content	Factory value (Range)	Adjustable properties
F10.50 (0x0A32)	Failure self-recovery times	Set the number of times allowed to perform fault recovery. **Note**: 0 indicates that the failure self-recovery function is disabled; otherwise, it is enabled.	0 (0~10)	STOP
F10.51 (0x0A33)	Failure self-recovery interval	Set the waiting time after a fault occurs until reset.	1.0s (0.0s~100.0s)	STOP
F10.52 (0x0A34)	Failure recovery number	Indicate the number of failure self-recovery attempts that have been performed, read-only.	0	READ
F10.53 (0x0A34)	Fault number limit	Set whether to enable the fault number limit function. 0: not enabled 1: enabled	0 (0~1)	STOP
F10.55 (0x0A37)	Motor overload model	0: common motor 1: variable frequency motor (50Hz) 2: variable frequency motor (60Hz) 3: motor without cooling fan	0 (0~3)	RUN
F10.56 (0x0A38)	Motor insulation class	0: insulation class A 1: insulation class E 2: insulation class B 3: insulation class F 4: insulation class H 5: special class S	3 (0~5)	STOP
F10.57 (0x0A39)	Work pattern of the motor	0-1: S1 pattern (continuous operation) 2: S2 pattern 3-9: according to S3-S9	0 (0~9)	STOP
F10.58 (0x0A3A)	Motor overload start threshold	Motor overload start threshold, actual current is greater than cumulative increased overload.	105.0% (0.0%~130.0%)	STOP
F10.59 (0x0A3B)	Motor overload current coefficient	Motor overload current = actual current * motor overload current coefficient	100.0% (0.0%~250.0%)	STOP

6.1.5 Group F12: Communication Parameters

- Group F12.0x: Modbus parameter setting

Code (Address)	Name	Content	Factory value (Range)	Adjustable properties
F12.00 (0x0C00)	Modbus current protocol	0: Modbus slave 1: Modbus master 2: manufacturer's host computer protocol 3: manufacturer's keyboard protocol 4: manufacturer's burning protocol F 5: manufacturer's burning protocol A	0 (0~1)	STOP
F12.01 (0x0C01)	Modbus communication address	Different values for different slaves	1 (1~247)	STOP
F12.02 (0x0C02)	Communication baud rate selection	0: 1200bps 1: 2400bps 2: 4800bps 3: 9600bps 4: 19200bps 5: 38400bps 6: 57600bps 7: 115200bps	3 (0~7)	STOP
F12.03 (0x0C03)	Modbus data format	0: (N, 8, 1) no parity, data bit: 8, stop bit: 1 1: (E, 8, 1) even parity, data bit: 8, stop bit: 1 2: (O, 8, 1) odd parity, data bit:8, stop bit:1 3: (N, 8, 2) no parity, data bit: 8, stop bit: 2 4: (E, 8, 2) even parity, data bit: 8, stop bit: 2 5: (O, 8, 2) odd parity, data bit: 8, stop bit: 2	0 (0~5)	STOP
F12.04 (0x0C04)	Modbus transmission response	0: write operation responds; 1: write operation does not respond	0 (0~1)	RUN

F12.05 (0x0C05)	Modbus communication response delay	Set the answer delay for Modbus communication.	0ms (0ms~5000ms)	RUN
F12.06 (0x0C06)	Modbus communication failure timeout	Set the failure timeout for Modbus communication.	1.0s (0.1s~100.0s)	RUN
F12.07 (0x0C07)	Communications disconnection	RJ45 interface for Modbus communication disconnection 0: detection of timeout fault off 1: report an error and free stop 2: report a warning and continue running 3: forced stop	0 (0~3)	RUN

- Group F12.1x: Modbus host parameter setting

Code (Address)	Name	Content	Factory value (Range)	Adjustable properties
F12.10 (0x0C0A)	Host cycle transmission parameter selection	Ones, tens, hundreds, and thousands all can be selected with: 0: invalid 1: host running command 2: host given frequency 3: host output frequency 4: host upper limit frequency 5: host given torque 6: host output torque 7: reserved 8: reserved 9: host giving PID A: host PID feedback B: reserved C: active current component	0x0031 (0x0000~0xCCCC)	RUN
F12.11 (0x0C0B)	Customized addresses for giving frequency	Set customized addresses for given frequency	0x0000 (0x0000~0xFFFF)	RUN
F12.12 (0x0C0C)	Customized addresses for giving command	Set customized addresses for given command	0x0000 (0x0000~0xFFFF)	RUN
F12.13 (0x0C0D)	Command to forward running	Set this address to forward running command value	0x0001 (0x0000~0xFFFF)	RUN
F12.14 (0x0C0E)	Command to reverse running	Set this address to reverse running command value	0x0002 (0x0000~0xFFFF)	RUN
F12.15 (0x0C0F)	Command to stop	Set this address to stop command value	0x0005 (0x0000~0xFFFF)	RUN
F12.16 (0x0C10)	Command to reset	Set this address to reset command value	0x0007 (0x0000~0xFFFF)	RUN
F12.19 (0x0C13)	Host sending command selection	Host sending command selection 0: send running command 1: send running status	0 (0~1)	RUN

- Group F12.2x: RJ45 parameter setting

Code (Address)	Name	Content	Factory value (Range)	Adjustable properties
F12.20 (0x0C14)	RJ45 current protocol	0: Modbus slave 1: Modbus master 2: manufacturer's host computer protocol 3: manufacturer's keyboard protocol 4: manufacturer's burning protocol F 5: manufacturer's burning protocol A	0 (0~1)	STOP
F12.21 (0x0C15)	Modbus communication address	Different values for different slaves	1 (1~247)	STOP
F12.22 (0x0C16)	Communication baud rate selection	0: 1200bps 1: 2400bps 2: 4800bps	3 (0~7)	STOP

		3: 9600bps 4: 19200bps 5: 38400bps 6: 57600bps 7: 115200bps		
F12.23 (0x0C17)	Modbus data format	0: (N, 8, 1) no parity, data bit: 8, stop bit: 1 1: (E, 8, 1) even parity, data bit: 8, stop bit: 1 2: (O, 8, 1) odd parity, data bit:8, stop bit:1 3: (N, 8, 2) no parity, data bit: 8, stop bit: 2 4: (E, 8, 2) even parity, data bit: 8, stop bit: 2 5: (O, 8, 2) odd parity, data bit: 8, stop bit: 2	0 (0~5)	STOP
F12.24 (0x0C18)	Modbus transmission response	0: write operation responds 1: write operation does not respond	0 (0~1)	RUN
F12.25 (0x0C19)	Modbus communication response delay	Set the answer delay for Modbus communication.	0ms (0ms~5000ms)	RUN
F12.26 (0x0C1A)	Modbus communication failure timeout	Set the failure timeout for Modbus communication.	1.0s (0.1s~100.0s)	RUN
F12.27 (0x0C1B)	Communications disconnection	RJ45 interface for Modbus communication disconnection 0: detection of timeout faults off 1: report fault and free stop 2: report an error and continue running 3: forced stop	0 (0~3)	RUN

- Group F12.3x: PROFIBUS-DP

Code (Address)	Name	Content	Factory value (Range)	Adjustable properties
F12.30 (0x0C1E)	DP card address	Set the communication addresses	1 (1~247)	RUN
F12.32 (0x0C20)	DP master-slave communication fault setting	DP master-slave communication fault selection 0: detection of timeout faults off 1: report an alarm and free stop 2: report a warning and continue running	0 (0~2)	STOP
F12.33 (0x0C21)	DP card slot selection	0: not enabled 1: slotA1 2: slotA2 3: slotA3 4~ 6: slotB1~B3 7~ 9: slotC1~C3 10: FDDI	0 (0~10)	RUN

Note: Expansion cards are not allowed to be plugged or unplugged with power up.

- Group F12.4x: CANopen

Code (Address)	Name	Content	Factory value (Range)	Adjustable properties
F12.40 (0x0C28)	CAN mode selection	0: CANOPEN slave 1: manufacturer-customized slave 2: manufacturer-customized master	1 (0~2)	RUN
F12.41 (0x0C29)	Communication address	Set the address of the slave.	1 (1~247)	RUN
F12.42 (0x0C2A)	Communication baud rate selection	0: 20kbps 1: 50kbps 2: 100kbps 3: 125kbps 4: 250kbps 5: 500kbps 6: 1Mbps	3 (0~6)	RUN
F12.43 (0x0C2B)	CAN master-slave communication fault	Fault selections: 0: detection of timeout off 1: report an alarm and free stop 2: report a warning and continue running	0 (0~2)	RUN

Note: Expansion cards are not allowed to be plugged or unplugged with power up.

- Group F12.5x: HsCom parameters

Code (Address)	Name	Content	Factory value (Range)	Adjustable properties
F12.50 (0x0C32)	HsCom protocol	0: Modbus slave 1: Modbus master 2: manufacturer's host computer protocol 3: manufacturer's keyboard protocol 4: manufacturer's burning protocol F 5: manufacturer's burning protocol A 6: internal high-speed master 7: internal slave	0 (0~7)	RUN
F12.51 (0x0C33)	Communication address	Set different values for different slaves	1 (1~247)	RUN
F12.52 (0x0C34)	Communication baud rate selection	0: 1200bps 1: 2400bps 2: 4800bps 3: 9600bps 4: 19200bps 5: 38400bps 6: 57600bps 7: 115200bps	3 (0~6)	RUN
F12.53 (0x0C35)	Modbus data format	0: (N, 8, 1) no parity, data bit: 8, stop bit: 1 1: (E, 8, 1) even parity, data bit: 8, stop bit: 1 2: (O, 8, 1) odd parity, data bit:8, stop bit:1 3: (N, 8, 2) no parity, data bit: 8, stop bit: 2 4: (E, 8, 2) even parity, data bit: 8, stop bit: 2 5: (O, 8, 2) odd parity, data bit: 8, stop bit: 2	0 (0~5)	STOP
F12.54 (0x0C36)	Modbus transmission response	0: write operation responds 1: write operation does not respond	0 (0~1)	RUN
F12.55 (0x0C37)	Modbus communication response delay	Set the answer delay for Modbus communication.	0ms (0ms~5000ms)	RUN
F12.56 (0x0C38)	Modbus communication failure timeout	Set the failure timeout for Modbus communication.	1.0s (0.1s~100.0s)	RUN
F12.57 (0x0C39)	Communications disconnection	RJ45 interface for Modbus communication disconnection 0: detection of timeout fault off 1: report fault and free stop 2: report an error and continue running 3: forced stop	0 (0~3)	RUN

6.1.6 Group F19: DI Physical Action Parameter

- F19.00~F19.13: DI turn-on/off delay time

Code (Address)	Name	Content	Factory value (Range)	Adjustable properties
F19.00 (0x1300)	DI1 on-delay	Set DI1 on-delay time	0.001s (0.000s~6.000s)	RUN
F19.01 (0x1301)	DI1 off-delay	Set DI1 off-delay time	0.001s (0.000s~6.000s)	RUN
F19.02 (0x1302)	DI2 on-delay	Set DI2 on-delay time	0.001s (0.000s~6.000s)	RUN
F19.03 (0x1303)	DI2 off-delay	Set DI2 off-delay time	0.001s (0.000s~6.000s)	RUN
F19.04 (0x1304)	DI3 on-delay	Set DI3 on-delay time	0.001s (0.000s~6.000s)	RUN
F19.05 (0x1305)	DI3 off-delay	Set DI3 off-delay time	0.001s (0.000s~6.000s)	RUN
F19.06 (0x1306)	DI4 on-delay	Set DI4 on-delay time	0.001s (0.000s~6.000s)	RUN
F19.07 (0x1307)	DI4 off-delay	Set DI4 off-delay time	0.001s (0.000s~6.000s)	RUN

F19.08 (0x1308)	DI5 on-delay	Set DI5 on-delay time	0.001s (0.000s~6.000s)	RUN
F19.09 (0x1309)	DI5 off-delay	Set DI5 off-delay time	0.001s (0.000s~6.000s)	RUN
F19.10 (0x130A)	DI6 on-delay	Set DI6 on-delay time	0.001s (0.000s~6.000s)	RUN
F19.11 (0x130B)	DI6 off-delay	Set DI6 off-delay time	0.001s (0.000s~6.000s)	RUN
F19.12 (0x130C)	DI7 on-delay DIL	Set DI7 on-delay DIL	0.001s (0.000s~6.000s)	RUN
F19.13 (0x130D)	DI7 off-delay DIL	Set DI7 off-delay DIL	0.001s (0.000s~6.000s)	RUN

- F19.14~F19.17: HDI turn-on/off-delay

Code (Address)	Name	Content	Factory value (Range)	Adjustable properties
F19.14 (0x130E)	HDI1 on-delay	Set HDI1 on-delay	0.001s (0.000s~6.000s)	RUN
F19.15 (0x130F)	HDI1 off-delay	Set HDI1 off-delay	0.001s (0.000s~6.000s)	RUN
F19.16 (0x1310)	HDI2 on-delay	Set HDI2 on-delay	0.001s (0.000s~6.000s)	RUN
F19.17 (0x1311)	HDI2 off-delay	Set HDI2 off-delay	0.001s (0.000s~6.000s)	RUN

- F19.18: DI terminal characteristic selection

Code (Address)	Name	Content	Factory value (Range)	Adjustable properties
F19.18 (0x1312)	DI1~HDI2 terminal characteristics	0: valid when closed; 1: valid when open; Hex:0x0000~0x7FFF bit0~bit14 corresponds to DI1~HDI2	0x0000 (0x0000~0xFFFF)	RUN

- F19.19~F19.28: HDO/RDO turn-on/off-delay

Code (Address)	Name	Content	Factory value (Range)	Adjustable properties
F19.19 (0x1313)	HDO1 on-delay	Set HDO1 on-delay	0.001s (0.000s~6.000s)	RUN
F19.20 (0x1314)	HDO1 off-delay	Set HDO1 off-delay	0.001s (0.000s~6.000s)	RUN
F19.21 (0x1315)	HDO2 on-delay	Set HDO2 on-delay	0.001s (0.000s~6.000s)	RUN
F19.22 (0x1316)	HDO2 off-delay	Set HDO2 off-delay	0.001s (0.000s~6.000s)	RUN
F19.23 (0x1317)	RDO1 on-delay	Set RDO1 on-delay	0.001s (0.000s~6.000s)	RUN
F19.24 (0x1318)	RDO1 off-delay	Set RDO1 off-delay	0.001s (0.000s~6.000s)	RUN
F19.25 (0x1319)	RDO2 on-delay	Set RDO2 on-delay	0.001s (0.000s~6.000s)	RUN
F19.26 (0x131A)	RDO2 off-delay	Set RDO2 off-delay	0.001s (0.000s~6.000s)	RUN
F19.27 (0x131B)	RDO3 on-delay	Set RDO3 on-delay	0.001s (0.000s~6.000s)	RUN
F19.28 (0x131C)	RDO3 off-delay	Set RDO3 off-delay	0.001s (0.000s~6.000s)	RUN

- F19.29~F19.30: HDO/RDO positive/negative logic

Code (Address)	Name	Content	Factory value (Range)	Adjustable properties
F19.29 (0x131D)	HDO1/HDO2 positive and negative logic	0: positive logic 1: negative logic bit0: DO1 bit1: DO2	0x0000 (0x0000~0x0003)	RUN
F19.30 (0x131E)	RDO1/RDO2/ RDO3 positive and negative logic	0: positive logic 1: negative logic bit0: RDO1 bit1: RDO2 bit1: RDO2	0x0000 (0x0000~0x0003)	RUN

6.1.7 Group F27: DCDC Parameters

- Group F27.00~F27.12: common parameter setting

Code (Address)	Name	Content	Factory value (Range)	Adjustable properties
F27.00 (0x1B00)	Operation mode	Set operation mode 0: voltage mode; 1: current mode	1 (0~1)	RUN
F27.01 (0x1B01)	Waiting time	Set waiting time for operation preparation.	2.5s (2.50~ 600.0s)	RUN
F27.02 (0x1B02)	Voltage mode selection	0: LV side; 1: HV side	0 (0~1)	RUN
F27.05 (0x1B05)	Positive current enable	0: not enabled; 0: enabled	0 (0~1)	STOP
F27.06 (0x1B06)	Negative current enable	0: not enabled; 1: enabled	0 (0~1)	STOP
F27.07 (0x1B07)	LV-side current forward enable	0: not enabled; 1: enabled	0 (0~1)	STOP
F27.08 (0x1B08)	HV-side current forward enable	0: not enabled; 1: enabled	0 (0~1)	STOP
F27.09 (0x1B09)	LV-side voltage rise time	Set LV-side voltage rise time	5.0s (0.020~ 300.00s)	RUN
F27.10 (0x1B0A)	LV-side voltage drop time	Set LV-side voltage drop time	5.0s (0.020~ 300.00s)	RUN
F27.11 (0x1B0B)	HV-side voltage rise time	Set HV-side voltage rise time	5.0s (0.020~ 300.00s)	RUN
F27.12 (0x1B0C)	HV-side voltage drop time	Set HV-side voltage drop time	5.0s (0.020~ 300.00s)	RUN

- F27.13~F27.41: command channel parameter setting

Code (Address)	Name	Content	Factory value (Range)	Adjustable properties
F27.13 (0x1B0D)	Command channel selection	0: command channel1; 1: command channel2	0 (0~1)	STOP
F27.15 (0x1B0F)	[Channel 1] LV-side voltage via digit entering	Set the LV-side voltage	<100.0V (20.0 ~ 1150.0V)	STOP
F27.17 (0x1B11)	[Channel 1] HV-side voltage via digit entering	Set the HV-side voltage	<1000.0V (460.0 ~ 1200.0V)	STOP
F27.18 (0x1B12)	[Channel 1] Current source	0: set by digit setting 1: set by HV-side regulator	0 (0~1)	STOP
F27.19 (0x1B13)	[Channel 1] Current via digit entering	Set the current set value	0 (-3000.0 ~ 3000.0A)	STOP
F27.20 (0x1B14)	[Channel 1] LV-side voltage upper limit	Set the LV-side voltage upper limit	<1000.0V (20.0 ~ 1150.0V)	STOP
F27.21 (0x1B15)	[Channel 1] LV-side voltage lower limit	Set the LV-side voltage lower limit	<20.0V (20.0 ~ 1150.0V)	STOP
F27.22 (0x1B16)	[Channel 1] HV-side voltage upper limit	Set the HV-side voltage upper limit	<1200.0V (460.0 ~ 1200.0V)	STOP
F27.23 (0x1B17)	[Channel 1] HV-side voltage lower limit	Set the HV-side voltage lower limit	<460.0V (460.0 ~ 1200.0V)	STOP
F27.24 (0x1B18)	[Channel 1] Positive current limit via digit entering	Set the positive current limit value	160% (0.0~160%)	STOP
F27.25 (0x1B19)	[Channel 1] Negative current limit via digit entering	Set the negative current limit value	-160% (160% ~ 0)	STOP
F27.26 (0x1B1A)	[Channel 1] Positive power limit via digit entering	Set the positive power limit value	220% (0.0~220%)	STOP
F27.27 (0x1B1B)	[Channel 1] Negative power limit via digit entering	Set the negative power limit value	-220% (220% ~ 0)	STOP
F27.29 (0x1B1D)	[Channel 2] LV-side voltage via digit entering	Set the LV-side voltage	<100.0V (20.0 ~ 1150.0V)	STOP
F27.31 (0x1B1F)	[Channel 2] HV-side voltage via digit entering	Set the HV-side voltage	<1000.0V (460.0 ~ 1200.0V)	STOP
F27.32 (0x1B20)	[Channel 2] Current source	0: via digit entering	0 (0~1)	STOP

		1: set by HV-side regulator		
F27.33 (0x1B21)	[Channel 2] Current via digit entering	Set the current via digit entering.	0 (-3000.0 ~ 3000.0A)	STOP
F27.34 (0x1B22)	[Channel 2] LV-side voltage upper limit	Set the LV-side voltage upper limit	<1000.0V (20.0 ~ 1150.0V)	STOP
F27.35 (0x1B23)	[Channel 2] LV-side voltage lower limit	Set the LV-side voltage lower limit	<20.0V (20.0 ~ 1150.0V)	STOP
F27.36 (0x1B24)	[Channel 2] HV-side voltage upper limit	Set the HV-side voltage upper limit	<1200.0V (460.0 ~ 1200.0V)	STOP
F27.37 (0x1B25)	[Channel 2] HV-side voltage lower limit	Set the HV-side voltage lower limit	<460.0V (460.0 ~ 1200.0V)	STOP
F27.38 (0x1B26)	[Channel 2] Positive current limit via digit entering	Set the positive current limit value	160% (0.0~160%)	STOP
F27.39 (0x1B27)	[Channel 2] Negative current limit via digit entering	Set the negative current limit value	-160% (160% ~ 0)	STOP
F27.40 (0x1B28)	[Channel 2] Positive power limit via digit entering	Set the positive power limit value	220% (0.0~220%)	STOP
F27.41 (0x1B29)	[Channel 2] Negative power limit via digit entering	Set the negative power limit value	-220% (220% ~ 0)	STOP

- F27.42 ~F27.50: auxiliary parameter setting (detection channel configuration)

Code (Address)	Name	Content	Factory value (Range)	Adjustable properties
F27.42 (0x1B2A)	Detection configuration method	0: customized configuration 1: configuration method 1 2: configuration method 2 3: configuration method 3	1 (0~3)	STOP
F27.43 (0x1B2B)	LV-side voltage source selection	0: not enabled 11: <VF-400-DCDT 1> voltage detection channel 21: <VF-400-DCDT 2> voltage detection channel 31: <VF-400-DCDT 3> voltage detection channel	11 (0~31)	STOP
F27.44 (0x1B2C)	LV-side feedforward current source selection	0: not enabled 11: <VF-400-DCDT 1> current detection channel A 12: <VF-400-DCDT 1> current detection channel B 21: <VF-400-DCDT 2> current detection channel A 22: <VF-400-DCDT 2> current detection channel B 31: <VF-400-DCDT 3> current detection channel A 32: <VF-400-DCDT 3> current detection channel B	11 (0~32)	STOP
F27.45 (0x1B2D)	HV-side positive current source	0: not enabled 11: <VF-400-DCDT 1> current detection channel A 12: <VF-400-DCDT 1> current detection channel B 21: <VF-400-DCDT 2> current detection channel A 22: <VF-400-DCDT 2> current detection channel B 31: <VF-400-DCDT 3> current detection channel A 32: <VF-400-DCDT 3> current detection channel B	12 (0~32)	STOP
F27.50 (0x1B32)	LV-side slow-start feedback voltage source selection	0: not enabled 11: <VF-400-DCDT 1> voltage detection channel 21: <VF-400-DCDT 2> voltage detection channel 31: <VF-400-DCDT 3> voltage detection channel	11 (0~31)	STOP

- F27.53 ~ F27.58: HV-side regulator parameter setting

Code (Address)	Name	Content	Factory value (Range)	Adjustable properties
F27.53 (0x1B35)	[HV side regulator] Max. negative current via digit entering	Set [HV side regulator] max. negative current value	0 (0 ~ 6000.0A)	RUN
F27.54	[HV side regulator] Max. positive	Set [HV side regulator] max. positive current value	0	RUN

(0x1B36)	current via digit entering		(0 ~ 6000.0A)	
F27.55 (0x1B37)	[HV side regulator] HV-side voltage point1 (max. negative current)	Set [HV side regulator] HV-side voltage point1 (max. negative current)	<460.0V (460.0 ~ 1200.0V)	RUN
F27.56 (0x1B38)	[HV side regulator] HV-side voltage point2 (negative current starts)	Set [HV side regulator] HV-side voltage point2 (negative current starts)	<480.0V (460.0 ~ 1200.0V)	RUN
F27.57 (0x1B39)	[HV side regulator] HV-side voltage point3 (positive current starts)	Set [HV side regulator] HV-side voltage point3 (positive current starts)	<1180.0V (460.0 ~ 1200.0V)	RUN
F27.58 (0x1B3A)	[HV side regulator] HV-side voltage point4 (max. positive current)	Set [HV side regulator] HV-side voltage point4 (max. positive current)	<1200.0V (460.0 ~ 1200.0V)	RUN

- F27.59~F27.71: positive current limiting curve setting

Code (Address)	Name	Content	Factory value (Range)	Adjustable properties
F27.59 (0x1B3B)	Positive current limit curve enable	0: not enabled;1: enabled	0 (0~1)	RUN
F27.60 (0x1B3C)	Positive current limit curve voltage source selection	0: LV-side voltage;1: others	0 (0~1)	RUN
F27.61 (0x1B3D)	Positive current limit curve voltage point1	Set positive current limit curve voltage point 1	<50.0V (20.0 ~ 1200.0V)	RUN
F27.62 (0x1B3E)	Positive current limit curve current point1	Set positive current limit curve current point 1	0 (0 ~ 6553.5A)	RUN
F27.63 (0x1B3F)	Positive current limit curve voltage point2	Set positive current limit curve voltage position 2	<51.0V (20.0 ~ 1200.0V)	RUN
F27.64 (0x1B40)	Positive current limit curve current point2	Set positive current limit curve current position 2	0 (0 ~ 6553.5A)	RUN
F27.65 (0x1B41)	Positive current limit curve voltage point3	Set positive current limit curve voltage point 3	<52.0V (20.0 ~ 1200.0V)	RUN
F27.66 (0x1B42)	Positive current limit curve current point3	Set positive current limit curve current point 3	0 (0 ~ 6553.5A)	RUN
F27.67 (0x1B43)	Positive current limit curve voltage point4	Set positive current limit curve voltage point 4	<53.0V (20.0 ~ 1200.0V)	RUN
F27.68 (0x1B44)	Positive current limit curve current point4	Set positive current limit curve current point 4	0 (0 ~ 6553.5A)	RUN
F27.69 (0x1B45)	Positive current limit curve voltage point5	Set positive current limit curve voltage point 5	<54.0V (20.0 ~ 1200.0V)	RUN
F27.70 (0x1B46)	Positive current limit curve current point5	Set positive current limit curve current point 5	0 (0 ~ 6553.5A)	RUN
F27.71 (0x1B47)	Positive current limit curve hysteresis loop voltage	Set positive current limit curve hysteresis loop voltage	<2.0V (0 ~ 1000.0V)	RUN

- F27.76 ~ F27.88: failsafe parameter setting

Code (Address)	Name	Content	Factory value (Range)	Adjustable properties
F27.76 (0x1B4C)	LV-side overvoltage	Set the LV-side overvoltage	<500.0V (20.0 ~ 1200.0V)	STOP
F27.77 (0x1B4D)	LV-side overcurrent	Set the LV-side overcurrent setpoint	400.0A (0.0 ~ 6000.0A)	STOP
F27.83 (0x1B53)	LV-side overvoltage/undervoltage protection enable	0: not enabled 1: enabled	0 (0~1)	RUN
F27.84 (0x1B54)	LV-side overvoltage/undervoltage protection current limit	Set the LV-side overvoltage and undervoltage protection current limit value	160% (0.0~160%)	RUN
F27.85 (0x1B55)	LV-side undervoltage protection lower limit	Set the LV-side undervoltage protection lower limit	<50.0V (20.0 ~ 1200.0V)	RUN
F27.86 (0x1B56)	LV-side undervoltage protection upper limit	Set the LV-side undervoltage protection upper limit	<60.0V (20.0 ~ 1200.0V)	RUN
F27.87 (0x1B57)	HV-side undervoltage protection lower limit	Set the HV-side undervoltage protection lower limit	<990.0V (20.0 ~ 1200.0V)	RUN
F27.88 (0x1B58)	HV-side undervoltage protection upper limit	Set the HV-side undervoltage protection upper limit	<1000.0V (0 ~ 1000.0V)	RUN

- F27.89 to F27.94: PI parameter setting

Code (Address)	Name	Content	Factory value (Range)	Adjustable properties
F27.89 (0x1B59)	LV-side voltage loop Kp	Set the LV-side voltage loop Kp	0.05 (0~40.000)	RUN
F27.90 (0x1B5A)	LV-side voltage loop Ki	Set the LV-side voltage loop Ki	0.1 (0~20.000)	RUN
F27.91 (0x1B5B)	HV-side voltage loop Kp	Set the HV-side voltage loop Kp	0.05 (0~40.000)	RUN
F27.92 (0x1B5C)	HV-side voltage loop Ki	Set the HV-side voltage loop Ki	0.1 (0~20.000)	RUN
F27.93 (0x1B5D)	Current loop Kp	Set the current loop Kp	0.1 (0~40.000)	RUN
F27.94 (0x1B5E)	Current loop Ki	Set the current loop Ki	0.2 (0~20.000)	RUN

6.1.8 Group F29: Fault Monitoring Parameters

Parameters are the same as group C01, see "6.1.14 Group C0x: Monitoring Parameters" for group C01: Fault monitoring for details.

6.1.9 Group E00: Parallel Parameters

Code (Address)	Name	Content	Factory value (Range)	Adjustable properties
E00.00 (0x2100)	Parallel enable	Set the parallel module enable or not	0 (0x0000~0xFFFF)	STOP
E00.01 (0x2101)	Parallel average current selection	0: not enabled 1: enabled	0 (0~1)	STOP
E00.02 (0x2102)	Parallel protection threshold without average current	Set the parallel protection threshold without average current	10% (5%~30%)	STOP

6.1.10 Group E04: IO Module 1 Parameters

- E04.00~E04.03: DI function setting

Code (Address)	Name	Content	Factory value (Range)	Adjustable properties
E04.00 (0x2400)	Slot selection	0: not enabled 1: slotA1 2: slotA2 3: slotA3 4~ 6: slotB1~B3 7~ 9: slotC1~C3 10: FDDI	0 (0~10)	RUN
E04.01 (0x2401)	x1DIO configuration	bit0: 0: DIO1 as DI 1: DIO1 as DO bit1: 0: DIO2 as DI 1: DIO2 as DO	0x0000 (0x0000~0x0003)	STOP
E04.02 (0x2402)	x1DI1 function	See the function of terminal DI	0 (0~95)	STOP
E04.03 (0x2403)	x1DI2 function	See the function of terminal DI	0 (0~95)	STOP

- E04.04~E04.15: DO function setting

Code (Address)	Name	Content	Factory value (Range)	Adjustable properties
E04.04 (0x2404)	x1DO1 signal source	See the function of terminal DO	0 (0~63)	RUN
E04.05 (0x2405)	x1DO2 signal source	See the function of terminal DO	0 (0~63)	RUN
E04.06 (0x2406)	x1 relay output signal source	See the function of terminal DO	0 (0~63)	RUN

E04.07 (0x2407)	x1DO1 positive/ negative logic	0: positive;1: negative	0 (0~1)	RUN
E04.08 (0x2408)	x1DO2 positive/ negative logic	0: positive;1: negative	0 (0~1)	STOP
E04.09 (0x2409)	x1 relay positive/negative logic	0: positive;1: negative	0 (0~1)	STOP
E04.10 (0x240A)	x1DIO1 on-delay	Set x1DIO1 on-delay	0.000s (0.000s~6.000s)	STOP
E04.11 (0x240B)	x1DIO1 off-delay	Set x1DIO1 off-delay	0.000s (0.000s~6.000s)	STOP
E04.12 (0x240C)	x1DIO2 on-delay	Set x1DIO2 on-delay	0.000s (0.000s~6.000s)	STOP
E04.13 (0x240D)	x1DIO2 off-delay	Set x1DIO2 off-delay	0.000s (0.000s~6.000s)	STOP
E04.14 (0x240E)	x1 relay on-delay	Set x1 relay on-delay	0.000s (0.000s~6.000s)	STOP
E04.15 (0x240F)	x1 relay off-delay	Set x1 relay off-delay	0.000s (0.000s~6.000s)	STOP

- E04.20~E04.32: AI function setting

Code (Address)	Name	Content	Factory value (Range)	Adjustable properties
E04.20 (0x2414)	AI1 type	0: -10.00V~10.00V 1: -20.00mA~20.00mA	0 (0~1)	STOP
E04.21 (0x2415)	AI2 type	0: -10.00V~10.00V 1: -20.00mA~20.00mA	0 (0~1)	STOP
E04.22 (0x2416)	AI curve selection	Ones-bit: AI1 Tens-bit: AI2 Hundreds-bit: reserved Thousands-bit: reserved 0: straight line (default) 1: Curve 1 (feature disabled for VF-400) 2: Curve 2 (feature disabled for VF-400)	0x0000 (0x0000~0x00FF)	STOP
E04.23 (0x2417)	AI1 lower limit	Set AI1 lower limit	-10.000 (-20.000~20.000)	STOP
E04.24 (0x2418)	AI1 lower limit ratio	Set AI1 lower limit ratio	100.00% (-300.00~300.00%)	STOP
E04.25 (0x2419)	AI1 upper limit	Set AI1 upper limit	10.000 (-20.000~20.000)	STOP
E04.26 (0x241A)	AI1 upper limit ratio	Set AI1 upper limit ratio	100.00% (-300.00%~300.00%)	STOP
E04.27 (0x241B)	AI1 filter time	Set AI1 filter time	0.010s (0.000s~6.000s)	STOP
E04.29 (0x241D)	AI2 lower limit ratio	Set AI2 lower limit ratio	100.00% (-300.00%~300.00%)	STOP
E04.30 (0x241E)	AI2 upper limit	Set AI2 upper limit	10.000 (-20.000~20.000)	STOP
E04.31 (0x241F)	AI2 upper limit ratio	Set AI2 upper limit ratio	100.00% (-300.00%~300.00%)	STOP
E04.32 (0x2420)	AI2 filter time	Set AI2 filter time	0.010s (0.000s~6.000s)	STOP

- E04.40~E04.53: AO function setting

Code (Address)	Name	Content	Factory value (Range)	Adjustable properties
E04.40 (0x2428)	AO1 type	0: 0.00V~10.00V 1: 0.0mA~20.00mA	0 (0~1)	STOP
E04.41 (0x2429)	AO1 source	0: given frequency 1: output frequency 2: output current 3: input voltage 4: output voltage 5: mechanical speed 6: given torque 7: output torque 8: given via PID 9: PID feedback 10: output power 11: bus voltage 12: AI1 value 13: AI2 value 14: reserved 15: reserved 16: module temperature 1 17: module temperature 2 18: RS485 communication 19: vDO1 function	0 (0~19)	RUN
E04.42 (0x242A)	AO1 filter time	Set AO1 filter time	0.010s (0.000s~6.000s)	STOP
E04.43 (0x242B)	AO1 lower limit ratio	Set AO1 lower limit ratio	0.00% (-600.00%~600.00%)	STOP
E04.44 (0x242C)	AO1 upper limit ratio	Set AO1 upper limit ratio	100.00% (-600.00%~600.00%)	STOP
E04.45 (0x242D)	AO1 lower limit	Set AO1 lower limit	0.000 (0.000~20.000)	STOP
E04.46 (0x242E)	AO1 upper limit	Set AO1 upper limit	10.000 (0.000~20.000)	STOP
E04.47 (0x242F)	AO2 type	0: 0.00V~10.00V 1: 0.00mA~20.00mA	0 (0~1)	STOP
E04.48 (0x2430)	AO2 source	0: given frequency 1: output frequency 2: output current 3: input voltage 4: output voltage 5: mechanical speed 6: given torque 7: output torque 8: given via PID 9: PID feedback 10: output power 11: bus voltage 12: AI1 value	0 (0~19)	RUN

		13: AI2 value 14: reserved 15: reserved 16: module temperature 1 17: module temperature 2 18: RS485 communication 19: vDO1 function		
E04.49 (0x2431)	AO2 filter time	Set AO2 filter time	0.010s (0.000s~6.000s)	STOP
E04.50 (0x2432)	AO2 lower limit ratio	Set AO2 lower limit ratio	0.00% (-600.00%~600.00%)	STOP
E04.51 (0x2433)	AO2 upper limit ratio	Set AO2 upper limit ratio	100.00% (-600.00%~600.00%)	STOP
E04.52 (0x2434)	AO2 lower limit	Set AO2 lower limit	0.000 (0.000~20.000)	STOP
E04.53 (0x2435)	AO2 upper limit	Set AO2 upper limit	10.000 (0.000~20.000)	STOP

6.1.11 Group E05: IO Module 2 Parameters

Parameters are the same as group E04, see "6.1.10 Group E04: IO Module1 Parameters".

6.1.12 Group E06: IO Module 3 Parameters

Parameters are the same as group E04, see "6.1.10 Group E04: IO Module1 Parameters".

6.1.13 Group E07: VF-400-DCDT 2 Card Parameters

Code (Address)	Name	Content	Factory value (Range)	Adjustable properties
E07.00 (0x2700)	[VF-400-DCDT 1] Expansion card slot selection	0: not enabled 1: slotA1 2: slotA2 3: slotA3 4~6: slotB1~B3 7~9: slotC1~C3 10~FDDI	0 (0~10)	STOP
E07.10 (0x270A)	[VF-400-DCDT 2] Expansion card slot selection	0: not enabled 1: slotA1 2: slotA2 3: slotA3 4~6: slotB1~B3 7~9: slotC1~C3 10~FDDI	0 (0~10)	STOP
E07.20 (0x2714)	[VF-400-DCDT 3] Expansion card slot selection	0: not enabled 1: slotA1 2: slotA2 3: slotA3 4~6: slotB1~B3 7~9: slotC1~C3 10~FDDI	0 (0~10)	STOP

6.1.14 Group E10: Black Box Module

Code (Address)	Name	Content	Factory value (Range)	Adjustable properties
E10.00 (0x2A00)	Black box function	0: not enabled 1: enabled	0 (0~1)	RUN
E10.01 (0x2A01)	Number of black box files	Set the number of black box files	0 (0~1000)	STOP

E10.02 (0x2A02)	Black box functional status	0: initialization not completed 1: initialization in progress 2: initialization completed	0 (0~2)	STOP
E10.03 (0x2A03)	ADC data customized channel 1	Set ADC data customized channel 1	0 (0~ 0xFFFF)	RUN
E10.04 (0x2A04)	ADC data customized channel 2	Set ADC data customized channel 2	0 (0~ 0xFFFF)	RUN
E10.05 (0x2A05)	ADC data customized channel 3	Set ADC data customized channel 3	0 (0~ 0xFFFF)	RUN
E10.06 (0x2A06)	ADC data customized channel 4	Set ADC data customized channel 4	0 (0~ 0xFFFF)	RUN
E10.07 (0x2A07)	ADC data customized channel 5	Set ADC data customized channel 5	0 (0~ 0xFFFF)	RUN
E10.08 (0x2A08)	2MS data customized channel 1	Set 2MS data customized channel 1	0 (0~ 0xFFFF)	RUN
E10.09 (0x2A09)	2MS data customized channel 2	Set 2MS data customized channel 2	0 (0~ 0xFFFF)	RUN
E10.10 (0x2A0A)	2MS data customized channel 3	Set 2MS data customized channel 3	0 (0~ 0xFFFF)	RUN
E10.11 (0x2A0B)	2MS data customized channel 4	Set 2MS data customized channel 4	0 (0~ 0xFFFF)	RUN
E10.12 (0x2A0C)	2MS data customized channel 5	Set 2MS data customized channel 5	0 (0~ 0xFFFF)	RUN
E10.13 (0x2A0D)	2MS data customized channel 6	Set 2MS data customized channel 6	0 (0~ 0xFFFF)	RUN
E10.14 (0x2A0E)	2MS data customized channel 7	Set 2MS data customized channel 7	0 (0~ 0xFFFF)	RUN
E10.15 (0x2A0F)	2MS data customized channel 8	Set 2MS data customized channel 8	0 (0~ 0xFFFF)	RUN
E10.16 (0x2A10)	2MS data customized channel 9	Set 2MS data customized channel 9	0 (0~ 0xFFFF)	RUN
E10.17 (0x2A11)	2MS data customized channel 10	Set 2MS data customized channel 10	0 (0~ 0xFFFF)	RUN
E10.18 (0x2A12)	2MS data customized channel 11	Set 2MS data customized channel 11	0 (0~ 0xFFFF)	RUN
E10.19 (0x2A13)	2MS data customized channel 12	Set 2MS data customized channel 12	0 (0~ 0xFFFF)	RUN
E10.20 (0x2A14)	2MS data customized channel 13	Set 2MS data customized channel 13	0 (0~ 0xFFFF)	RUN
E10.21 (0x2A15)	2MS data customized channel 14	Set 2MS data customized channel 14	0 (0~ 0xFFFF)	RUN
E10.22 (0x2A16)	2MS data customized channel 15	Set 2MS data customized channel 15	0 (0~ 0xFFFF)	RUN
E10.23 (0x2A17)	2MS data customized channel 16	Set 2MS data customized channel 16	0 (0~ 0xFFFF)	RUN

6.1.15 Group C0x: Monitoring Parameters

- C00 group: basic monitoring

Code (address)	Name	Code (address)	Name
C00.00 (0x4000)	Given frequency	C00.17 (0x4011)	Current hardware failure status
C00.01 (0x4001)	Output frequency	C00.25 (0x4019)	Failure 1
C00.02 (0x4002)	Output current	C00.26 (0x401A)	Failure 2
C00.03 (0x4003)	Bus voltage	C00.27 (0x401B)	Failure 3
C00.04 (0x4004)	Output voltage	C00.28 (0x401C)	Software version

C00.05 (0x4005)	Mechanical speed	C00.29 (0x401D)	U phase current AD
C00.06 (0x4006)	Given torque	C00.30 (0x401E)	V phase current AD
C00.07 (0x4007)	Output torque	C00.31 (0x401F)	W phase current AD
C00.08 (0x4008)	Given via PID	C00.32 (0x4020)	Software sub-version
C00.09 (0x4009)	PID feedback	C00.33 (0x4021)	Warning 1
C00.10 (0x400A)	Output power	C00.34 (0x4022)	Warning 2
C00.11 (0x400B)	Phase voltage	C00.35 (0x4023)	Warning 3
C00.12 (0x400C)	Max. module temperature	C00.36 (0x4024)	Reserved
C00.13 (0x400D)	Current carrier	C00.37 (0x4025)	Cumulative power consumption (low)
C00.14 (0x400E)	Drive status	C00.38 (0x4026)	Cumulative power consumption (high)
C00.15 (0x400F)	Drive command	C00.39 (0x4027)	Power factor angle
C00.16 (0x4010)	Running status	-	-

- Group C01: fault monitoring

Code (address)	Name	Code (address)	Name
C01.00 (0x4100)	Latest fault 1 type	C01.32 (0x4120)	Previous two fault 2 type
C01.01 (0x4101)	Latest fault 1 diagnosis information	C01.33 (0x4121)	Previous two fault 2 diagnosis information
C01.02 (0x4102)	Latest fault 2 type	C01.34 (0x4122)	Previous two fault 3 type
C01.03 (0x4103)	Latest fault 2 diagnosis information	C01.35 (0x4123)	Previous two fault 3 diagnosis information
C01.04 (0x4104)	Latest fault 3 type	C01.36 (0x4124)	Previous two fault operation frequency
C01.05 (0x4105)	Latest fault 3 diagnosis information	C01.37 (0x4125)	Previous two fault output voltage
C01.06 (0x4106)	Latest faulty working frequency	C01.38 (0x4126)	Previous two fault output current
C01.07 (0x4107)	Latest fault output voltage	C01.39 (0x4127)	Previous two fault bus voltage
C01.08 (0x4108)	Latest fault output current	C01.40 (0x4128)	Previous two fault module temperature
C01.09 (0x4109)	Latest fault bus voltage	C01.41 (0x4129)	AC drive command during previous two faults
C01.10 (0x410A)	Latest fault module temperature	C01.42 (0x412A)	AC drive status during previous two faults
C01.11 (0x410B)	AC drive command during latest fault	C01.43 (0x412B)	Previous two fault time
C01.12 (0x410C)	AC drive status during latest fault	C01.44 (0x412C)	Previous two fault date
C01.13 (0x410D)	Latest fault time	C01.45 (0x412D)	Previous three fault 1 type
C01.14 (0x410E)	Latest fault date	C01.46 (0x412E)	Previous three fault 1 diagnosis information
C01.15 (0x410F)	Previous fault 1 type	C01.47 (0x412F)	Previous three fault 2 type
C01.16 (0x4110)	Previous fault 1 diagnosis information	C01.48 (0x4130)	Previous three fault 2 diagnosis information
C01.17 (0x4111)	Previous fault 2 type	C01.49 (0x4131)	Previous three fault 3 type
C01.18 (0x4112)	Previous fault 2 diagnosis information	C01.50 (0x4132)	Previous three fault 3 diagnosis information
C01.19 (0x4113)	Previous fault 3 type	C01.51 (0x4133)	Previous four fault 1 type
C01.20 (0x4114)	Previous fault 3 diagnosis information	C01.52 (0x4134)	Previous four fault 1 diagnosis information
C01.21 (0x4115)	Previous fault operation frequency	C01.53 (0x4135)	Previous four fault 2 type
C01.22 (0x4116)	Previous fault output voltage	C01.54 (0x4136)	Previous four fault 2 diagnosis information
C01.23 (0x4117)	Previous fault output current	C01.55 (0x4137)	Previous four fault 3 type
C01.24 (0x4118)	Previous fault bus voltage	C01.56 (0x4138)	Previous four fault 3 diagnosis information
C01.25 (0x4119)	Previous fault module temperature	C01.57 (0x4139)	Previous five fault 1 type
C01.26 (0x411A)	AC drive command during previous fault	C01.58 (0x413A)	Previous five fault 1 diagnosis information
C01.27 (0x411B)	AC drive status during previous fault	C01.59 (0x413B)	Previous five fault 2 type
C01.28 (0x411C)	Previous fault time	C01.60 (0x413C)	Previous five fault 2 diagnosis information
C01.29 (0x411D)	Previous fault date	C01.61 (0x413D)	Previous five fault 3 type
C01.30 (0x411E)	Previous two fault 1 type	C01.62 (0x413E)	Previous five fault 3 diagnosis information
C01.31 (0x411F)	Previous two fault 1 diagnosis information	-	-

- Group C03: maintenance monitoring

Code (address)	Name	Code (address)	Name
C03.00 (0x4300)	RTC year	C03.10 (0x430A)	Capacitor maintenance
C03.01 (0x4301)	RTC month/day	C03.11 (0x430B)	Relay maintenance
C03.02 (0x4302)	RTC-AMPM+ hour	C03.12 (0x430C)	IGBT maintenance
C03.03 (0x4303)	RTC minute/second	C03.13 (0x430D)	Reserved
C03.04 (0x4304)	Running time	C03.14 (0x430E)	Reserved
C03.05 (0x4305)	Cumulative running time	C03.15 (0x430F)	Machine code 1
C03.06 (0x4306)	Cumulative power-up (hours)	C03.16 (0x4310)	Machine code 2
C03.07 (0x4307)	Cumulative power-up (minute)	C03.17 (0x4311)	Machine code 3
C03.08 (0x4308)	Cooling fan running time	C03.18 (0x4312)	Machine code 4
C03.09 (0x4309)	Cooling fan maintenance	C03.19 (0x4313)	Machine code 5

- Group C07: factory monitoring

Code (address)	Name	Code (address)	Name
C07.00 (0x4700)	FPGA counting	C07.15 (0x470F)	Current fault status
C07.01 (0x4701)	FPGA_Prd	C07.16 (0x4710)	U phase current AD
C07.02 (0x4702)	Drive command word	C07.17 (0x4711)	U phase current AD
C07.03 (0x4703)	Reserved	C07.18 (0x4712)	U phase current AD
C07.04 (0x4704)	Reserved	C07.19 (0x4713)	Bus voltage AD
C07.05 (0x4705)	Reserved	C07.20 (0x4714)	Bus current
C07.06 (0x4706)	PWM_U status	C07.21 (0x4715)	U-phase voltage
C07.07 (0x4707)	PWM_V status	C07.22 (0x4716)	V-phase voltage
C07.08 (0x4708)	PWM_W status	C07.23 (0x4717)	W-phase voltage
C07.09 (0x4709)	Drive status word 1	C07.24 (0x4718)	Subdevice zero-drift correction status
C07.10 (0x470A)	Drive status word 2	C07.25 (0x4719)	Subdevice synchronization status
C07.11 (0x470B)	FPGA first fault code	C07.26 (0x471A)	FPGA address monitor 1
C07.12 (0x470C)	FPGA second fault code	C07.27 (0x471B)	FPGA address monitor 2
C07.13 (0x470D)	FPGA third fault code	C07.28 (0x471C)	FPGA address monitor 3
C07.14 (0x470E)	FPGA fourth fault code	C07.29 (0x471D)	FPGA address monitor 4

- Group C08: drive information monitoring

Code (address)	Name	Code (address)	Name
C08.00 (0x4800)	Product type	C08.19 (0x4813)	SLOT_B1 type
C08.01 (0x4801)	Module rated power	C08.20 (0x4814)	Software version
C08.02 (0x4802)	Module rated voltage	C08.21 (0x4815)	SLOT_B2 type
C08.03 (0x4803)	Module rated current	C08.22 (0x4816)	Software version
C08.04 (0x4804)	Reserved	C08.23 (0x4817)	SLOT_B3 type
C08.05 (0x4805)	Reserved	C08.24 (0x4818)	Software version
C08.06 (0x4806)	CU software type	C08.25 (0x4819)	SLOT_C1 type
C08.07 (0x4807)	DSP software version number	C08.26 (0x481A)	Software version
C08.08 (0x4808)	Reserved	C08.27 (0x481B)	SLOT_C2 type
C08.09 (0x4809)	Main board FPGA software version number	C08.28 (0x481C)	Software version
C08.10 (0x480A)	Interface board type	C08.29 (0x481D)	SLOT_C3 type
C08.11 (0x480B)	Interface board software version	C08.30 (0x481E)	Software version
C08.12 (0x480C)	Reserved	C08.31 (0x481F)	FDDI type
C08.13 (0x480D)	SLOT_A1 type	C08.32 (0x4820)	Software version
C08.14 (0x480E)	Software version	C08.33 (0x4821)	Software upgrade time-year
C08.15 (0x480F)	SLOT_A2 type	C08.34 (0x4822)	Month/day

C08.16 (0x4810)	Software version	C08.35 (0x4823)	Time
C08.17 (0x4811)	SLOT_A3 type	C08.36 (0x4824)	Author
C08.18 (0x4812)	Software version	C08.37 (0x4825)	OBJ version

- Group C10: IO display monitoring

Code (address)	Name	Code (address)	Name
C10.00 (0x4A00)	DI physical status	C10.42 (0x4A2A)	x1AO2 output value
C10.01 (0x4A01)	DO physical status	C10.43 (0x4A2B)	x1AO2 output ratio
C10.02 (0x4A02)	Current AD value of AI1	C10.44 (0x4A2C)	Reserved
C10.03 (0x4A03)	Current AD value of AI2	C10.45 (0x4A2D)	x2IO card temperature
C10.04 (0x4A04)	Current AD value of AO1	C10.46 (0x4A2E)	Current AD value of x2AI1
C10.05 (0x4A05)	Current AD value of AO2	C10.47 (0x4A2F)	Current AD value of x2AI2
C10.06 (0x4A06)	AI1 type	C10.48 (0x4A30)	Current AD value of x2AO1
C10.07 (0x4A07)	AI1 value	C10.49 (0x4A31)	Current AD value of x2AO2
C10.08 (0x4A08)	AI1 ratio	C10.50 (0x4A32)	x2AI1 type
C10.09 (0x4A09)	AI2 type	C10.51 (0x4A33)	x2AI1 value
C10.10 (0x4A0A)	AI2 value	C10.52 (0x4A34)	x2AI1 ratio
C10.11 (0x4A0B)	AI2 ratio	C10.53 (0x4A35)	x2AI2 type
C10.12 (0x4A0C)	AO1 type	C10.54 (0x4A36)	x2AI2 value
C10.13 (0x4A0D)	AO1 source	C10.55 (0x4A37)	x2AI2 ratio
C10.14 (0x4A0E)	AO1 value	C10.56 (0x4A38)	x2AO2 type
C10.15 (0x4A0F)	AO1 ratio	C10.57 (0x4A39)	x2AO2 source
C10.16 (0x4A10)	AO2 type	C10.58 (0x4A3A)	x2AO1 value
C10.17 (0x4A11)	AO2 source	C10.59 (0x4A3B)	x2AO1 ratio
C10.18 (0x4A12)	AO2 value	C10.60 (0x4A3C)	x2AO2 type
C10.19 (0x4A13)	AO2 ratio	C10.61 (0x4A3D)	x2AO2 source
C10.20 (0x4A14)	IO module online status	C10.62 (0x4A3E)	x2AO2 value
C10.21 (0x4A15)	xDI physical status	C10.63 (0x4A3F)	x2AO2 ratio
C10.22 (0x4A16)	xDO physical status	C10.64 (0x4A40)	Reserved
C10.23 (0x4A17)	Reserved	C10.65 (0x4A41)	x3IO card temperature
C10.24 (0x4A18)	Reserved	C10.66 (0x4A42)	Current AD value of x3AI1
C10.25 (0x4A19)	x1IO card temperature	C10.67 (0x4A43)	Current AD value of x3AI2
C10.26 (0x4A1A)	Current AD of x1AI1	C10.68 (0x4A44)	Current AD value of x3AO1
C10.27 (0x4A1B)	Current AD of x1AI2	C10.69 (0x4A45)	Current AD value of x3AO2
C10.28 (0x4A1C)	Current AD of x1AO1	C10.70 (0x4A46)	x3AI1 type
C10.29 (0x4A1D)	Current AD of x1AO2	C10.71 (0x4A47)	x3AI1 value
C10.30 (0x4A1E)	x1AI1 type	C10.72 (0x4A48)	x3AI1 ratio
C10.31 (0x4A1F)	x1AI1 value	C10.73 (0x4A49)	x3AI2 type
C10.32 (0x4A20)	x1AI1 ratio	C10.74 (0x4A4A)	x3AI2 value
C10.33 (0x4A21)	x1AI2 type	C10.75 (0x4A4B)	x3AI2 ratio
C10.34 (0x4A22)	x1AI2 value	C10.76 (0x4A4C)	x3AO2 type
C10.35 (0x4A23)	x1AI2 ratio	C10.77 (0x4A4D)	x3AO2 source
C10.36 (0x4A24)	x1AO1 type	C10.78 (0x4A4E)	x3AO1 value
C10.37 (0x4A25)	x1AO1 source	C10.79 (0x4A4F)	x3AO1 ratio
C10.38 (0x4A26)	x1AO1 value	C10.80 (0x4A50)	x3AO2 type
C10.39 (0x4A27)	x1AO1 ratio	C10.81 (0x4A51)	x3AO2 source
C10.40 (0x4A28)	x1AO2 type	C10.82 (0x4A52)	x3AO2 value
C10.41 (0x4A29)	x1AO2 source	C10.83 (0x4A53)	x3AO2 ratio

Note:

1. DI physical status: bit8-bit0 indicates HDI2, HDI1, DIL, and DI6-DI1 respectively.
2. DO physical status: bit8-bit0 indicates vDO4-vDO1 (virtual terminal), DR3-DR1 (relay), DO2-DO1 respectively.
3. XDI physical status: bit5-bit0 indicates x3DI2, x3DI1, x2DI2, x2DI1, x1DI2, and x1DI1 respectively.
4. XDO physical status: bit8-bit0 indicates X3DR (relay), x3DO2, x3DO1, x2DR, x2DO2, x2DO1, x1DR, x1DO2, and x1DO1 respectively.

- Group C12 group: VF-400-DCDT information and rectifier-specific monitoring

Code (address)	Name	Code (address)	Name
C12.00 (0x4C00)	Grid phase sequence	C12.07 (0x4C07)	T-phase current RMS
C12.01 (0x4C01)	Grid detection frequency	C12.08 (0x4C08)	Active current
C12.02 (0x4C02)	RS voltage RMS	C12.09 (0x4C09)	Reactive current
C12.03 (0x4C03)	ST voltage RMS	C12.10 (0x4C0A)	output voltage
C12.04 (0x4C04)	TR voltage RMS	C12.11 (0x4C0B)	Reserved
C12.05 (0x4C05)	R-phase current RMS	C12.12 (0x4C0C)	VF-400-DCDT card internal temperature
C12.06 (0x4C06)	S-phase current RMS	C12.13 (0x4C0D)	VF-400-DCDT card external collected temperature

6.2 Terminal I/O Function Selection

DI	Description	DI	Description	DI	Description
0	No functions	24	PID setting switching 1	48	Command channel to keyboard
1	Forward operation	25	PID setting switching 2	49	Command channel to terminal
2	Reverse operation	26	PID setting switching 3	50	Command channel to communication
3	Three-line operation (DIi)	27	PID feedback switching 1	51	Command channel to expansion card
4	Forward jogging	28	PID feedback switching 2	52	Operation off
5	Reverse jogging	29	PID feedback switching 3	53	Forward operation off
6	Free stop	30	PLC pause	54	Reverse operation off
7	Emergency stop	31	PLC reboot	55	Reserved
8	Fault reset	32	Acceleration/deceleration time selection terminal1	56	Reserved
9	External fault input	33	Acceleration/deceleration time selection terminal2	57	Reserved
10	Frequency Up (UP)	34	Acceleration/ deceleration pause	58	Reserved
11	Frequency Down (DW)	35	Reserved	59	Reserved
12	Frequency UP/DOWN reset (UP/DW reset)	36	Reserved	60	Reserved
13	Channel A to channel B	37	Reserved	61	Speed/ torque switching
14	Frequency channel combination to A	38	Keyboard keys and display self-test	62	Reserved
15	Frequency channel combination to B	39	Reserved	63~79	Reserved
16	Multi-speed terminal 1	40	Timer triggering terminals	80	Power-up triggered
17	Multi-speed terminal 2	41	Timer reset terminals	81	Power-down triggered
18	Multi-speed terminal 3	42	Counter clock input terminal	82	Main connector connection monitor
19	Multi-speed terminal 4	43	Counter reset terminal	83	Main connector disconnection monitor
20	PID control canceled	44	DC brake command	84	Main connector alarm monitor
21	PID control paused	45	Pre-excitation command terminal	85	Reserved
22	PID characteristic switching	46	Reserved	86	Reserved
23	PID parameter switching	47	Reserved	87~95	Reserved
D	**Description**	**DO**	**Description**	**DO**	**Description**
0	No output	14	Lower limit frequency reached	28	Underload warning output 2
1	Drive in operation	15	Program running cycle completed	29	Motor overload warning output
2	Drive in reverse operation	16	Program running phase completed	30	Communication address 6018 controlled output

3	Drive in forward operation	17	PID feedback above upper limit	31	Drive overheat
4	Fault trip alarm 1 (alarm during fault self-recovery)	18	PID feedback below lower limit	32	Motor overheat warning output
5	Fault trip alarm 2 (no alarm during fault self-recovery)	19	Sensor disconnection feedback from PID	33	Reserved
6	Shutdown due to external faults	20	Reserved	34	Reserved
7	Drive undervoltage	21	Timer time up	35	Reserved
8	Drive ready for operation	22	Max. value of counter reached	36	Reserved
9	Output frequency level detection 1 (FDT1)	23	Set value of counter reached	37	Comparator 1
10	Output frequency level detection 2 (FDT2)	24	Dynamic brake in progress	38	Comparator 2
11	Given frequency reached	25	PG disconnection feedback	39	Reserved
12	Zero-speed operation in progress	26	Emergency stop in progress	40~47	Reserved
13	Upper limit frequency reached	27	Overload warning output 1	48~63	Reserved

Chapter 7 Troubleshooting

7.1 Fault Viewing

7.1.1 Fault Classification

There are two categories according to urgency level:

- Fault: indicates that a major fault or error has occurred in the AC drive so that operation shall be stopped immediately and waits for users to troubleshoot the problem.
- Alarm: users are alerted that an exception has occurred but it is quite minor, so the operational status is not affected, and users will decide the further handling.

The fault display screen is shown below:

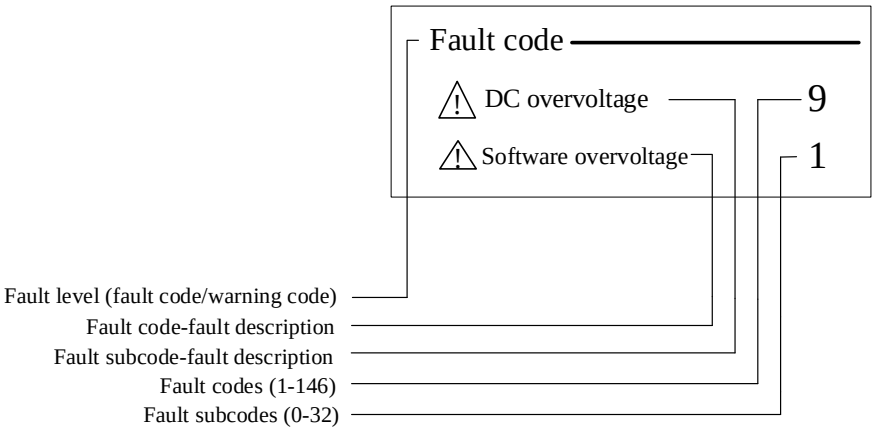

Figure 7-1 Fault code example

7.1.2 Fault Message Viewing

Faults are indicated as fault codes and fault sub-codes, the former for classification and the latter for specific faults. For example, fault code 9-1, 9 here indicates a DC overvoltage fault and 1 indicates a software overvoltage.

- Current fault

The VF-400-CINU+DCDC can record up to 3 simultaneous faults (including 3 faults and 3 warnings), when more than 3 simultaneous faults occur, the later faults will not be recorded. Current faults can be viewed in the communication group parameter code.

Current fault code		Current warning code
Code	Subcode	Warning code
C01.00	C01.01	C00.33
C01.02	C01.03	C00.34
C01.04	C01.05	C00.35

- History fault

VF-400-CINU+DCDC supports logging information about the latest fault and the most recent top 5 faults.

Latest fault		Previous fault		Previous two faults	
Code	Subcode	Code	Subcode	Code	Subcode
C01.00	C01.01	C01.15	C01.16	C01.30	C01.31
C01.02	C01.03	C01.17	C01.18	C01.32	C01.33
C01.04	C01.05	C01.19	C01.20	C01.34	C01.35
Previous three faults		Previous four faults		Previous five faults	
Code	Subcode	Code	Subcode	Code	Subcode
C01.45	C01.46	C01.51	C01.52	C01.57	C01.58

C01.47	C01.48	C01.53	C01.54	C01.59	C01.60
C01.49	C01.50	C01.55	C01.56	C01.61	C01.62

● Fault data records

VF-400-CINU+DCDC will synchronously record the data occurred while recording the fault, and the fault data is recorded in group C01.

Content	Latest fault	Previous fault	Previous two faults
Fault operation frequency	C01.06	C01.21	C01.36
Fault output voltage	C01.07	C01.22	C01.37
Fault output current	C01.08	C01.23	C01.38
Fault bus voltage	C01.09	C01.24	C01.39
Fault module temperature	C01.10	C01.25	C01.30
AC drive command during fault	C01.11	C01.26	C01.31
AC drive status during fault	C01.12	C01.27	C01.32
Fault date	C01.13	C01.28	C01.33
Fault time	C01.14	C01.29	C01.34

● View faults via VF-400-PAN-G

VF-400-PAN-G supports not only viewing fault information directly through the above parameters, but also viewing fault information in the fault menu.

1. In the "Menu" interface, use the "Up/Down" to select "Function", and press "OK".

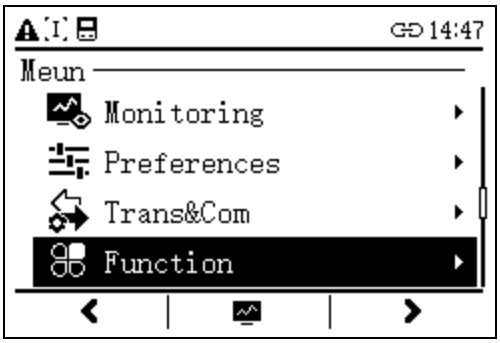

2. In the "Function" interface, select "Failure Diagnosis".

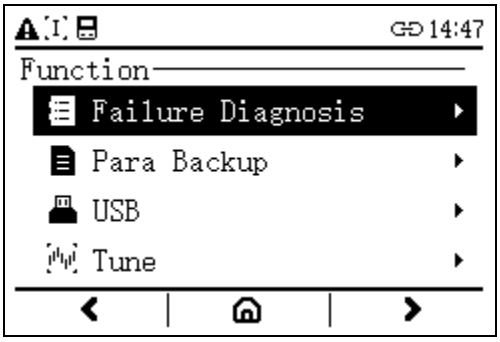

3. View "Current Failure", "Latest Failure", "Previous Failure" that occur at different times in the “Failure Diagnosis” interface.

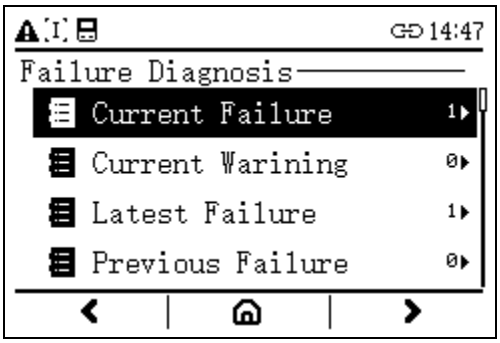

4. Enter the " Current Failure" to view the current fault information including fault codes and fault sub-codes.

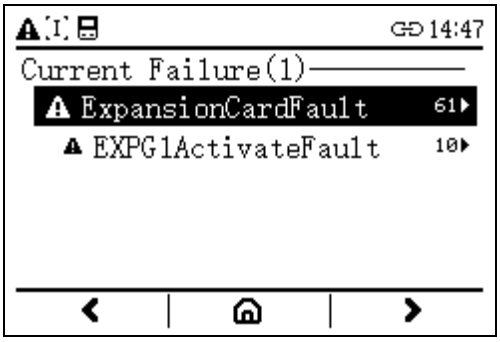

● View faults via VCACSoft

When using VCACSoft, users can open "Troubleshooting" to view the description of the faults, causes, solutions, as well as the relevant data recorded at the time of the fault, please refer to "3.2.4 Basic Function" for details.

7.1.3 Fault Reset

VF-400-CINU+DCDC support fault reset methods such as VF-400-PAN-G, VCACSoft reset and re-power reset.

Method	Description
VF-400-PAN-G	Press "Stop" in any interface after normal connection to reset.
VCACSoft	Press "Fault Reset" in the control panel after normal connection.
Re-power	Re-power the VF-400-CINU+DCDC control to reset the faults.

7.2 External Fault Customization

Input external faults via terminals to F05.00-F05.08 to trigger self-defined faults and stop drive output when those faults occur.

7.3 Fault List

Code	Name	Sub-code	Name	Cause	Solution
1	Hardware fault	0	Current detection chip abnormality	Current detection chip failure	Seek support from the manufacturer
		1	Other current detection chip abnormality	Multi-detection chip failure	
		2	Main control chip interrupt abnormality	Wrong main control chip interrupt time	
		10	Current detection chip abnormality on No.1 drive board	Current detection chip failure	
		11	Abnormalities in other detection chips on No.1 drive board	Multi-detection chip failure	
		12	Main control chip interrupt abnormality on No.1 drive board	Wrong main control chip interrupt time	

2	Drive fault	0	U-phase Hbridge drive failure	SC_FaultUH hardware signal triggered	1. Check whether the hardware module is damaged; 2. Check whether the wiring of the driver module is correct; 3. Seek support from the manufacturer.
		1	U-phase Lbridge drive failure	SC_FaultUL hardware signal triggered	
		2	V-phase Hbridge drive failure	SC_FaultVH hardware signal triggered	
		3	V-phase Lbridge drive failure	SC_FaultVL hardware signal triggered	
		4	W-phase Hbridge drive failure	SC_FaultWH hardware signal triggered	
		5	W-phase Lbridge drive failure	SC_FaultWL hardware signal triggered	
		9	Multiple drive failures	Multiple drive fault signals triggered simultaneously	
		10	U-phase Hbridge drive failure on No.1 board	SC_FaultUH hardware signal triggered on No.1 board	
		11	U-phase Lbridge drive failure on No.1 board	SC_FaultUL hardware signal triggered on No.1 board	
		12	V-phase Hbridge drive failure on No.1 board	SC_FaultVH hardware signal triggered on No.1 board	
		13	V-phase Lbridge drive failure on No.1 board	SC_FaultVL hardware signal triggered on No.1 board	
		14	W-phase Hbridge drive failure on No.1 board	SC_FaultWH hardware signal triggered on No.1 board	
		15	W-phase Lbridge drive failure on No.1 board	SC_FaultWL hardware signal triggered on No.1 board	
		19	Multiple drive failures on No.1 board	Multiple drive fault signals triggered simultaneously on No.1 drive board	
		20	U-phase Hbridge drive failure on No.2 board	SC_FaultUH hardware signal triggered on No.2 board	
		21	U-phase Lbridge drive failure on No.2 board	SC_FaultUL hardware signal triggered on No.2 board	
		22	V-phase Hbridge drive failure on No.2 board	SC_FaultVH hardware signal triggered on No.2 board	
		23	V-phase Lbridge drive failure on No.2 board	SC_FaultVL hardware signal triggered on No.2 board	
		24	W-phase Hbridge drive failure on No.2 board	SC_FaultWH hardware signal triggered on No.2 board	
		25	W-phase Lbridge drive failure on No.2 board	SC_FaultWL hardware signal triggered on No.2 board	
		29	Multiple drive failures on No.2 board	Multiple drive fault signals triggered simultaneously on No.2 drive board	
		30	U-phase Hbridge drive failure on No.3 board	SC_FaultUH hardware signal triggered on No.3 board	
		31	U-phase Lbridge drive failure on No.3 board	SC_FaultUL hardware signal triggered on No.3 board	
		32	V-phase Hbridge drive failure on No.3 board	SC_FaultVH hardware signal triggered on No.3 board	
		33	V-phase Lbridge drive failure on No.3 board	SC_FaultVL hardware signal triggered on No.3 board	
		34	W-phase Hbridge drive failure on No.3 board	SC_FaultWH hardware signal triggered on No.3 board	
		35	W-phase Lbridge drive failure on No.3 board	SC_FaultWL hardware signal triggered on No.3 board	

		39	Multiple drive failures on No.3 board	Multiple drive fault signals triggered simultaneously on No.3 drive board	
		40	U-phase Hbridge drive failure on No.4 board	SC_FaultUH hardware signal triggered on No.4 board	
		41	U-phase Lbridge drive failure on No.4 board	SC_FaultUL hardware signal triggered on No.4 board	
		42	V-phase Hbridge drive failure on No.4 board	SC_FaultVH hardware signal triggered on No.4 board	
		43	V-phase Lbridge drive failure on No.4 board	SC_FaultVL hardware signal triggered on No.4 board	
		44	W-phase Hbridge drive failure on No.4 board	SC_FaultWH hardware signal triggered on No.4 board	
		45	W-phase Lbridge drive failure on No.4 board	SC_FaultWL hardware signal triggered on No.4 board	
		49	Multiple drive failures on No.4 board	Multiple drive fault signals triggered simultaneously on No.4 drive board	
		50	U-phase Hbridge drive failure on No.5 board	SC_FaultUH hardware signal triggered on No.5 board	
		51	U-phase Lbridge drive failure on No.5 board	SC_FaultUL hardware signal triggered on No.5 board	
		52	V-phase Hbridge drive failure on No.5 board	SC_FaultVH hardware signal triggered on No.5 board	
		53	V-phase Lbridge drive failure on No.5 board	SC_FaultVL hardware signal triggered on No.5 board	
		54	W-phase Hbridge drive failure on No.5 board	SC_FaultWH hardware signal triggered on No.5 board	
		55	W-phase Lbridge drive failure on No.5 board	SC_FaultWL hardware signal triggered on No.5 board	
		59	Multiple drive failures on No.5 board	Multiple drive fault signals triggered simultaneously on No.5drive board	
		60	U-phase Hbridge drive failure on No.6 board	SC_FaultUH hardware signal triggered on No.6 board	
		61	U-phase Lbridge drive failure on No.6 board	SC_FaultUL hardware signal triggered on No.6 board	
		62	V-phase Hbridge drive failure on No.6 board	SC_FaultVH hardware signal triggered on No.6 board	
		63	V-phase Lbridge drive failure on No.6 board	SC_FaultVL hardware signal triggered on No.6 board	
		64	W-phase Hbridge drive failure on No.6 board	SC_FaultWH hardware signal triggered on No.6 board	
		65	W-phase Lbridge drive failure on No.6 board	SC_FaultWL hardware signal triggered on No.6 board	
		69	Multiple drive failures on No.6 board	Multiple drive fault signals triggered simultaneously on No.6 drive board	
		70	U-phase Hbridge drive failure on No.7 board	SC_FaultUH hardware signal triggered on No.7 board	
		71	U-phase Lbridge drive failure on No.7 board	SC_FaultUL hardware signal triggered on No.7 board	

		72	V-phase Hbridge drive failure on No.7 board	SC_FaultVH hardware signal triggered on No.7 board	
		73	V-phase Lbridge drive failure on No.7 board	SC_FaultVL hardware signal triggered on No.7 board	
		74	W-phase Hbridge drive failure on No.7 board	SC_FaultWH hardware signal triggered on No.7 board	
		75	W-phase Lbridge drive failure on No.7 board	SC_FaultWL hardware signal triggered on No.7 board	
		79	Multiple drive failures on No.7 board	Multiple drive fault signals triggered simultaneously on No.7 drive board	
		80	U-phase Hbridge drive failure on No.8 board	SC_FaultUH hardware signal triggered on No.8 board	
		81	U-phase Lbridge drive failure on No.8 board	SC_FaultUL hardware signal triggered on No.8 board	
		82	V-phase Hbridge drive failure on No.8 board	SC_FaultVH hardware signal triggered on No.8 board	
		83	V-phase Lbridge drive failure on No.8 board	SC_FaultVL hardware signal triggered on No.8 board	
		84	W-phase Hbridge drive failure on No.8 board	SC_FaultWH hardware signal triggered on No.8 board	
		85	W-phase Lbridge drive failure on No.8 board	SC_FaultWL hardware signal triggered on No.8 board	
		89	Multiple drive failures on No.8 board	Multiple drive fault signals triggered simultaneously on No.8 drive board	
		90	U-phase Hbridge drive failure on No.9 board	SC_FaultUH hardware signal triggered on No.9 board	
		91	U-phase Lbridge drive failure on No.9 board	SC_FaultUL hardware signal triggered on No.9 board	
		92	V-phase Hbridge drive failure on No.9 board	SC_FaultVH hardware signal triggered on No.9 board	
		93	V-phase Lbridge drive failure on No.9 board	SC_FaultVL hardware signal triggered on No.9 board	
		94	W-phase Hbridge drive failure on No.9 board	SC_FaultWH hardware signal triggered on No.9 board	
		95	W-phase Lbridge drive failure on No.9 board	SC_FaultWL hardware signal triggered on No.9 board	
		99	Multiple drive failures on No.9 board	Multiple drive fault signals triggered simultaneously on No.9 drive board	
		100	U-phase Hbridge drive failure on No.10 board	SC_FaultUH hardware signal triggered on No.10 board	
		101	U-phase Lbridge drive failure on No.10 board	SC_FaultUL hardware signal triggered on No.10 board	
		102	V-phase Hbridge drive failure on No.10 board	SC_FaultVH hardware signal triggered on No.10 board	
		103	V-phase Lbridge drive failure on No.10 board	SC_FaultVL hardware signal triggered on No.10 board	
		104	W-phase Hbridge drive failure on No.10 board	SC_FaultWH hardware signal triggered on No.10 board	

		105	W-phase Lbridge drive failure on No.10 board	SC_FaultWL hardware signal triggered on No.10 board	
		109	Multiple drive failures on No.10 board	Multiple drive fault signals triggered simultaneously on No.10 drive board	
3	Drive power fault	0	U-phase Hbridge power failure	LO_UH hardware power signal triggered	1. Check whether the hardware module is damaged; 2. Check whether the wiring of the driver module is correct; 3. Seek support from the manufacturer.
		1	U-phase Lbridge power failure	LO_UH hardware power signal triggered	
		2	V-phase Hbridge power failure	LO_VH hardware power signal triggered	
		3	V-phase Lbridge power failure	LO_VH hardware power signal triggered	
		4	W-phase Hbridge power failure	LO_WH hardware power signal triggered	
		5	W-phase Lbridge power failure	LO_WH hardware power signal triggered	
		9	Multiple power failures	Multiple hardware power signal triggered simultaneously	
		10	U-phase Hbridge power failure on No.1 board	LO_UH hardware power signal triggered on No.1 board	
		11	U-phase Lbridge power failure on No.1 board	LO_UL hardware power signal triggered on No.1 board	
		12	V-phase Hbridge power failure on No.1 board	LO_VH hardware power signal triggered on No.1 board	
		13	V-phase Lbridge power failure on No.1 board	LO_VL hardware power signal triggered on No.1 board	
		14	W-phase Hbridge power failure on No.1 board	LO_WH hardware power signal triggered on No.1 board	
		15	W-phase Lbridge power failure on No.1 board	LO_WL hardware power signal triggered on No.1 board	
		19	Multiple power failures on No.1 board	Multiple hardware power signal triggered simultaneously on No.1 board	
		20	U-phase Hbridge power failure on No.2 board	LO_UH hardware power signal triggered on No.2 board	
		21	U-phase Lbridge power failure on No.2 board	LO_UL hardware power signal triggered on No.2 board	
		22	V-phase Hbridge power failure on No.2 board	LO_VH hardware power signal triggered on No.2 board	
		23	V-phase Lbridge power failure on No.2 board	LO_VL hardware power signal triggered on No.2 board	
		24	W-phase Hbridge power failure on No.2 board	LO_WH hardware power signal triggered on No.2 board	
		25	W-phase Lbridge power failure on No.2 board	LO_WL hardware power signal triggered on No.2 board	
		29	Multiple power failures on No.2 board	Multiple hardware power signal triggered simultaneously on No.2 board	
		30	U-phase Hbridge power failure on No.3 board	LO_UH hardware power signal triggered on No.3 board	
		31	U-phase Lbridge power failure on No.3 board	LO_UL hardware power signal triggered on No.3 board	
		32	V-phase Hbridge power failure on No.3 board	LO_VH hardware power signal triggered on No.3 board	
		33	V-phase Lbridge power failure on No.3 board	LO_VL hardware power signal triggered on No.3 board	

		34	W-phase Hbridge power failure on No.3 board	LO_WH hardware power signal triggered on No.3 board	
		35	W-phase Lbridge power failure on No.3 board	LO_WL hardware power signal triggered on No.3 board	
		39	Multiple power failures on No.3 board	Multiple hardware power signal triggered simultaneously on No.3 board	
		40	U-phase Hbridge power failure on No.4 board	LO_UH hardware power signal triggered on No.4 board	
		41	U-phase Lbridge power failure on No.4 board	LO_UL hardware power signal triggered on No.4 board	
		42	V-phase Hbridge power failure on No.4 board	LO_VH hardware power signal triggered on No.4 board	
		43	V-phase Lbridge power failure on No.4 board	LO_VL hardware power signal triggered on No.4 board	
		44	W-phase Hbridge power failure on No.4 board	LO_WH hardware power signal triggered on No.4 board	
		45	W-phase Lbridge power failure on No.4 board	LO_WL hardware power signal triggered on No.4 board	
		49	Multiple power failures on No.4 board	Multiple hardware power signal triggered simultaneously on No.4 board	
		50	U-phase Hbridge power failure on No.5 board	LO_UH hardware power signal triggered on No.5 board	
		51	U-phase Lbridge power failure on No.5 board	LO_UL hardware power signal triggered on No.5 board	
		52	V-phase Hbridge power failure on No.5 board	LO_VH hardware power signal triggered on No.5 board	
		53	V-phase Lbridge power failure on No.5 board	LO_VL hardware power signal triggered on No.5 board	
		54	W-phase Hbridge power failure on No.5 board	LO_WH hardware power signal triggered on No.5 board	
		55	W-phase Lbridge power failure on No.5 board	LO_WL hardware power signal triggered on No.5 board	
		59	Multiple power failures on No.5 board	Multiple hardware power signal triggered simultaneously on No.5 board	
		60	U-phase Hbridge power failure on No.6 board	LO_UH hardware power signal triggered on No.6 board	
		61	U-phase Lbridge power failure on No.6 board	LO_UL hardware power signal triggered on No.6 board	
		62	V-phase Hbridge power failure on No.6 board	LO_VH hardware power signal triggered on No.6 board	
		63	V-phase Lbridge power failure on No.6 board	LO_VL hardware power signal triggered on No.6 board	
		64	W-phase Hbridge power failure on No.6 board	LO_WH hardware power signal triggered on No.6 board	
		65	W-phase Lbridge power failure on No.6 board	LO_WL hardware power signal triggered on No.6 board	
		69	Multiple power failures on No.6 board	Multiple hardware power signal triggered simultaneously on No.6 board	

		70	U-phase Hbridge power failure on No.7 board	LO_UH hardware power signal triggered on No.7 board	
		71	U-phase Lbridge power failure on No.7 board	LO_UL hardware power signal triggered on No.7 board	
		72	V-phase Hbridge power failure on No.7 board	LO_VH hardware power signal triggered on No.7 board	
		73	V-phase Lbridge power failure on No.7 board	LO_VL hardware power signal triggered on No.7 board	
		74	W-phase Hbridge power failure on No.7 board	LO_WH hardware power signal triggered on No.7 board	
		75	W-phase Lbridge power failure on No.7 board	LO_WL hardware power signal triggered on No.7 board	
		79	Multiple power failures on No.7 board	Multiple hardware power signal triggered simultaneously on No.7 board	
		80	U-phase Hbridge power failure on No.8 board	LO_UH hardware power signal triggered on No.8 board	
		81	U-phase Lbridge power failure on No.8 board	LO_UL hardware power signal triggered on No.8 board	
		82	V-phase Hbridge power failure on No.8 board	LO_VH hardware power signal triggered on No.8 board	
		83	V-phase Lbridge power failure on No.8 board	LO_VL hardware power signal triggered on No.8 board	
		84	W-phase Hbridge power failure on No.8 board	LO_WH hardware power signal triggered on No.8 board	
		85	W-phase Lbridge power failure on No.8 board	LO_WL hardware power signal triggered on No.8 board	
		89	Multiple power failures on No.8 board	Multiple hardware power signal triggered simultaneously on No.8 board	
		90	U-phase Hbridge power failure on No.9 board	LO_UH hardware power signal triggered on No.9 board	
		91	U-phase Lbridge power failure on No.9 board	LO_UL hardware power signal triggered on No.9 board	
		92	V-phase Hbridge power failure on No.9 board	LO_VH hardware power signal triggered on No.9 board	
		93	V-phase Lbridge power failure on No.9 board	LO_VL hardware power signal triggered on No.9 board	
		94	W-phase Hbridge power failure on No.9 board	LO_WH hardware power signal triggered on No.9 board	
		95	W-phase Lbridge power failure on No.9 board	LO_WL hardware power signal triggered on No.9 board	
		99	Multiple power failures on No.9 board	Multiple hardware power signal triggered simultaneously on No.9 board	
		100	U-phase Hbridge power failure on No.10 board	LO_UH hardware power signal triggered on No.10 board	
		101	U-phase Lbridge power failure on No.10 board	LO_UL hardware power signal triggered on No.10 board	
		102	V-phase Hbridge power failure on No.10 board	LO_VH hardware power signal triggered on No.10 board	

		103	V-phase Lbridge power failure on No.10 board	LO_VL hardware power signal triggered on No.10 board	
		104	W-phase Hbridge power failure on No.10 board	LO_WH hardware power signal triggered on No.10 board	
		105	W-phase Lbridge power failure on No.10 board	LO_WL hardware power signal triggered on No.10 board	
		109	Multiple power failures on No.10 board	Multiple hardware power signal triggered simultaneously on No.10 board	
4	Drive voltage fault	0	U-phase Hbridge voltage failure	Gfault_UH hardware voltage signal triggered	1. Check whether the hardware module is damaged; 2. Check whether the wiring of the driver module is correct; 3. Seek support from the manufacturer.
		1	U-phase Lbridge voltage failure	Gfault_UL hardware signal of the driving voltage triggered	
		2	V-phase Hbridge voltage failure	Gfault_VH hardware voltage signal triggered	
		3	V-phase Lbridge voltage failure	Gfault_VL hardware signal of the driving voltage triggered	
		4	W-phase Hbridge voltage failure	Gfault_WH hardware voltage signal triggered	
		5	W-phase Lbridge voltage failure	Gfault_WL hardware signal of the driving voltage triggered	
		9	Multiple drive voltage failures	Multiple hardware voltage signals triggered simultaneously	
		10	U-phase Hbridge voltage failure on No.1 board	Gfault_UH hardware voltage signal triggered on No.1 board	
		11	U-phase Lbridge voltage failure on No.1 board	Gfault_UL hardware voltage signal triggered on No.1 board	
		12	V-phase Hbridge voltage failure on No.1 board	Gfault_VH hardware voltage signal triggered on No.1 board	
		13	V-phase Lbridge voltage failure on No.1 board	Gfault_VL hardware voltage signal triggered on No.1 board	
		14	W-phase Hbridge voltage failure on No.1 board	Gfault_WH hardware voltage signal triggered on No.1 board	
		15	W-phase Lbridge voltage failure on No.1 board	Gfault_WL hardware voltage signal triggered on No.1 board	
		19	Multiple drive voltage failures on No.1 board	Multiple drive voltage fault signals triggered on No.1 board	
		20	U-phase Hbridge voltage failure on No.2 board	Gfault_UH hardware voltage signal triggered on No.2 board	
		21	U-phase Lbridge voltage failure on No.2 board	Gfault_UL hardware voltage signal triggered on No.2 board	
		22	V-phase Hbridge voltage failure on No.2 board	Gfault_VH hardware voltage signal triggered on No.2 board	
		23	V-phase Lbridge voltage failure on No.2 board	Gfault_VL hardware voltage signal triggered on No.2 board	
		24	W-phase Hbridge voltage failure on No.2 board	Gfault_WH hardware voltage signal triggered on No.2 board	
		25	W-phase Lbridge voltage failure on No.2 board	Gfault_WL hardware voltage signal triggered on No.2 board	
		29	Multiple drive voltage failures on No.2 board	Multiple drive voltage fault signals triggered on No.2 board	
		30	U-phase Hbridge voltage failure on No.3	Gfault_UH hardware voltage signal triggered	

			board	on No.3 board	
		31	U-phase Lbridge voltage failure on No.3 board	Gfault_UL hardware voltage signal triggered on No.3 board	
		32	V-phase Hbridge voltage failure on No.3 board	Gfault_VH hardware voltage signal triggered on No.3 board	
		33	V-phase Lbridge voltage failure on No.3 board	Gfault_VL hardware voltage signal triggered on No.3 board	
		34	W-phase Hbridge voltage failure on No.3 board	Gfault_WH hardware voltage signal triggered on No.3 board	
		35	W-phase Lbridge voltage failure on No.3 board	Gfault_WL hardware voltage signal triggered on No.3 board	
		39	Multiple drive voltage failures on No.3 board	Multiple drive voltage fault signals triggered on No.3 board	
		40	U-phase Hbridge voltage failure on No.4 board	Gfault_UH hardware voltage signal triggered on No.4 board	
		41	U-phase Lbridge voltage failure on No.4 board	Gfault_UL hardware voltage signal triggered on No.4 board	
		42	V-phase Hbridge voltage failure on No.4 board	Gfault_VH hardware voltage signal triggered on No.4 board	
		43	V-phase Lbridge voltage failure on No.4 board	Gfault_VL hardware voltage signal triggered on No.4 board	
		44	W-phase Hbridge voltage failure on No.4 board	Gfault_WH hardware voltage signal triggered on No.4 board	
		45	W-phase Lbridge voltage failure on No.4 board	Gfault_WL hardware voltage signal triggered on No.4 board	
		49	Multiple drive voltage failures on No.4 board	Multiple drive voltage fault signals triggered on No.4 board	
		50	U-phase Hbridge voltage failure on No.5 board	Gfault_UH hardware voltage signal triggered on No.5 board	
		51	U-phase Lbridge voltage failure on No.5 board	Gfault_UL hardware voltage signal triggered on No.5 board	
		52	V-phase Hbridge voltage failure on No.5 board	Gfault_VH hardware voltage signal triggered on No.5 board	
		53	V-phase Lbridge voltage failure on No.5 board	Gfault_VL hardware voltage signal triggered on No.5 board	
		54	W-phase Hbridge voltage failure on No.5 board	Gfault_WH hardware voltage signal triggered on No.5 board	
		55	W-phase Lbridge voltage failure on No.5 board	Gfault_WL hardware voltage signal triggered on No.5 board	
		59	Multiple drive voltage failures on No.5 board	Multiple drive voltage fault signals triggered on No.5 board	
		60	U-phase Hbridge voltage failure on No.6 board	Gfault_UH hardware voltage signal triggered on No.6 board	
		61	U-phase Lbridge voltage failure on No.6 board	Gfault_UL hardware voltage signal triggered on No.6 board	
		62	V-phase Hbridge voltage failure on No.6 board	Gfault_VH hardware voltage signal triggered on No.6 board	
		63	V-phase Lbridge voltage failure on No.6	Gfault_VL hardware voltage signal triggered	

			board	on No.6 board	
		64	W-phase Hbridge voltage failure on No.6 board	Gfault_WH hardware voltage signal triggered on No.6 board	
		65	W-phase Lbridge voltage failure on No.6 board	Gfault_WL hardware voltage signal triggered on No.6 board	
		69	Multiple drive voltage failures on No.6 board	Multiple drive voltage fault signals triggered on No.6 board	
		70	U-phase Hbridge voltage failure on No.7 board	Gfault_UH hardware voltage signal triggered on No.7 board	
		71	U-phase Lbridge voltage failure on No.7 board	Gfault_UL hardware voltage signal triggered on No.7 board	
		72	V-phase Hbridge voltage failure on No.7 board	Gfault_VH hardware voltage signal triggered on No.7 board	
		73	V-phase Lbridge voltage failure on No.7 board	Gfault_VL hardware voltage signal triggered on No.7 board	
		74	W-phase Hbridge voltage failure on No.7 board	Gfault_WH hardware voltage signal triggered on No.7 board	
		75	W-phase Lbridge voltage failure on No.7 board	Gfault_WL hardware voltage signal triggered on No.7 board	
		79	Multiple drive voltage failures on No.7 board	Multiple drive voltage fault signals triggered on No.7 board	
		80	U-phase Hbridge voltage failure on No.8 board	Gfault_UH hardware voltage signal triggered on No.8 board	
		81	U-phase Lbridge voltage failure on No.8 board	Gfault_UL hardware voltage signal triggered on No.8 board	
		82	V-phase Hbridge voltage failure on No.8 board	Gfault_VH hardware voltage signal triggered on No.8 board	
		83	V-phase Lbridge voltage failure on No.8 board	Gfault_VL hardware voltage signal triggered on No.8 board	
		84	W-phase Hbridge voltage failure on No.8 board	Gfault_WH hardware voltage signal triggered on No.8 board	
		85	W-phase Lbridge voltage failure on No.8 board	Gfault_WL hardware voltage signal triggered on No.8 board	
		89	Multiple drive voltage failures on No.8 board	Multiple drive voltage fault signals triggered on No.8 board	
		90	U-phase Hbridge voltage failure on No.9 board	Gfault_UH hardware voltage signal triggered on No.9 board	
		91	U-phase Lbridge voltage failure on No.9 board	Gfault_UL hardware voltage signal triggered on No.9 board	
		92	V-phase Hbridge voltage failure on No.9 board	Gfault_VH hardware voltage signal triggered on No.9 board	
		93	V-phase Lbridge voltage failure on No.9 board	Gfault_VL hardware voltage signal triggered on No.9 board	
		94	W-phase Hbridge voltage failure on No.9 board	Gfault_WH hardware voltage signal triggered on No.9 board	
		95	W-phase Lbridge voltage failure on No.9 board	Gfault_WL hardware voltage signal triggered on No.9 board	
		99	Multiple drive voltage failures on No.9	Multiple drive voltage fault signals triggered	

			board	on No.9 board	
		100	U-phase Hbridge voltage failure on No.10 board	Gfault_UH hardware voltage signal triggered on No.10 board	
		101	U-phase Lbridge voltage failure on No.10 board	Gfault_UL hardware voltage signal triggered on No.10 board	
		102	V-phase Hbridge voltage failure on No.10 board	Gfault_VH hardware voltage signal triggered on No.10 board	
		103	V-phase Lbridge voltage failure on No.10 board	Gfault_VL hardware voltage signal triggered on No.10 board	
		104	W-phase Hbridge voltage failure on No.10 board	Gfault_WH hardware voltage signal triggered on No.10 board	
		105	W-phase Lbridge voltage failure on No.10 board	Gfault_WL hardware voltage signal triggered on No.10 board	
		109	Multiple drive voltage failures on No.10 board	Multiple drive voltage fault signals triggered on No.10 board	
5	Overcurrent fault	0	OC hardware failure	Multiple hardware voltage signals triggered simultaneously	1. Check motor parameters and overcurrent suppression setting; 2. Ensure correct current Hall; 3. Eliminate any short circuit to ground and between phases, etc.; 4. Extend the acceleration and deceleration time to reduce the load.
		1	U-phase software overcurrent	AD detection current of U-phase greater than threshold	
		2	V-phase software overcurrent	AD detection current of V-phase greater than threshold	
		3	W-phase software overcurrent	AD detection current of W-phase greater than threshold	
		9	Multi-phase software overcurrent	AD detection current of phases greater than threshold	
		10	OC hardware failure on No.1 board	OC hardware signal triggered on No.1 board	
		11	U-phase software overcurrent on No.1 board	AD detection current of U-phase greater than threshold on No.1 board	
		12	V-phase software overcurrent on No.1 board	AD detection current of V-phase greater than threshold on No.1 board	
		13	W-phase software overcurrent on No.1 board	AD detection current of W-phase greater than threshold on No.1 board	
		19	Multi-phase software overcurrent on No.1 board	AD detection current of phases greater than threshold on No.1 board	
		20	OC hardware failure on No.2 board	OC hardware signal triggered on No.2 board	
		21	U-phase software overcurrent on No.2 board	AD detection current of U-phase greater than threshold on No.2 board	
		22	V-phase software overcurrent on No.2 board	AD detection current of V-phase greater than threshold on No.2 board	
		23	W-phase software overcurrent on No.2 board	AD detection current of W-phase greater than threshold on No.2 board	
		29	Multi-phase software overcurrent on No.2 board	AD detection current of phases greater than threshold on No.2 board	
		30	OC hardware failure on No.3 board	OC hardware signal triggered on No.3 board	
		31	U-phase software overcurrent on No.3 board	AD detection current of U-phase greater than threshold on No.3 board	
		32	V-phase software overcurrent on No.3 board	AD detection current of V-phase greater than threshold on No.3 board	

		33	W-phase software overcurrent on No.3 board	AD detection current of W-phase greater than threshold on No.3 board	
		39	Multi-phase software overcurrent on No.3 board	AD detection current of phases greater than threshold on No.3 board	
		40	OC hardware failure on No.4 board	OC hardware signal triggered on No.4 board	
		41	U-phase software overcurrent on No.4 board	AD detection current of U-phase greater than threshold on No.4 board	
		42	V-phase software overcurrent on No.4 board	AD detection current of V-phase greater than threshold on No.4 board	
		43	W-phase software overcurrent on No.4 board	AD detection current of W-phase greater than threshold on No.4 board	
		49	Multi-phase software overcurrent on No.4 board	AD detection current of phases greater than threshold on No.4 board	
		50	OC hardware failure on No.5 board	OC hardware signal triggered on No.5 board	
		51	U-phase software overcurrent on No.5 board	AD detection current of U-phase greater than threshold on No.5 board	
		52	V-phase software overcurrent on No.5 board	AD detection current of V-phase greater than threshold on No.5 board	
		53	W-phase software overcurrent on No.5 board	AD detection current of W-phase greater than threshold on No.5 board	
		59	Multi-phase software overcurrent on No.5 board	AD detection current of phases greater than threshold on No.5 board	
		60	OC hardware failure on No.6 board	OC hardware signal triggered on No.6 board	
		61	U-phase software overcurrent on No.6 board	AD detection current of U-phase greater than threshold on No.6 board	
		62	V-phase software overcurrent on No.6 board	AD detection current of V-phase greater than threshold on No.6 board	
		63	W-phase software overcurrent on No.6 board	AD detection current of W-phase greater than threshold on No.6 board	
		69	Multi-phase software overcurrent on No.6 board	AD detection current of phases greater than threshold on No.6 board	
		70	OC hardware failure on No.7 board	OC hardware signal triggered on No.7 board	
		71	U-phase software overcurrent on No.7 board	AD detection current of U-phase greater than threshold on No.7 board	
		72	V-phase software overcurrent on No.7 board	AD detection current of V-phase greater than threshold on No.7 board	
		73	W-phase software overcurrent on No.7 board	AD detection current of W-phase greater than threshold on No.7 board	
		79	Multi-phase software overcurrent on No.7 board	AD detection current of phases greater than threshold on No.7 board	
		80	OC hardware failure on No.8 board	OC hardware signal triggered on No.8 board	
		81	U-phase software overcurrent on No.8 board	AD detection current of U-phase greater than threshold on No.8 board	
		82	V-phase software overcurrent on No.8 board	AD detection current of V-phase greater than threshold on No.8 board	
		83	W-phase software overcurrent on No.8 board	AD detection current of W-phase greater than threshold on No.8 board	
		89	Multi-phase software overcurrent on	AD detection current of phases greater than	

			No.8 board	threshold on No.8 board	
		90	OC hardware failure on No.9 board	OC hardware signal triggered on No.9 board	
		91	U-phase software overcurrent on No.9 board	AD detection current of U-phase greater than threshold on No.9 board	
		92	V-phase software overcurrent on No.9 board	AD detection current of V-phase greater than threshold on No.9 board	
		93	W-phase software overcurrent on No.9 board	AD detection current of W-phase greater than threshold on No.9 board	
		99	Multi-phase software overcurrent on No.9 board	AD detection current of phases greater than threshold on No.9 board	
		100	OC hardware failure on No.10 board	OC hardware signal triggered on No.10 board	
		101	U-phase software overcurrent on No.10 board	AD detection current of U-phase greater than threshold on No.10 board	
		102	V-phase software overcurrent on No.10 board	AD detection current of V-phase greater than threshold on No.10 board	
		103	W-phase software overcurrent on No.10 board	AD detection current of W-phase greater than threshold on No.10 board	
		109	Multi-phase software overcurrent on No.10 board	AD detection current of phases greater than threshold on No.10 board	
6	Module overtemperature fault	0	Module 1 overtemperature	Temperature greater than threshold	1. Check the temperature circuit; 2. Lower the load; 3. Lower the ambient temperature.
		1	Module 2 overtemperature	Temperature greater than threshold	
		2	Module 3 overtemperature	Temperature greater than threshold	
		3	Module 4 overtemperature	Temperature greater than threshold	
		4	Module 5 overtemperature	Temperature greater than threshold	
		5	Module 6 overtemperature	Temperature greater than threshold	
		6	Module 7 overtemperature	Temperature greater than threshold	
		7	Module 8 overtemperature	Temperature greater than threshold	
		8	Module 9 overtemperature	Temperature greater than threshold	
		9	Multiple module overtemperature	Temperature greater than threshold	
		10	Module 1 overtemperature on No.1 board	Temperature greater than threshold No.1 board	
		11	Module 2 overtemperature on No.1 board	Temperature greater than threshold No.1 board	
		12	Module 3 overtemperature on No.1 board	Temperature greater than threshold No.1 board	
		13	Module 4 overtemperature on No.1 board	Temperature greater than threshold No.1 board	
		14	Module 5 overtemperature on No.1 board	Temperature greater than threshold No.1 board	
		15	Module 6 overtemperature on No.1 board	Temperature greater than threshold No.1 board	
		16	Module 7 overtemperature on No.1 board	Temperature greater than threshold No.1 board	
		17	Module 8 overtemperature on No.1 board	Temperature greater than threshold No.1 board	
		18	Module 9 overtemperature on No.1 board	Temperature greater than threshold No.1 board	

		19	Multiple module overtemperature on No.1 board	Temperature greater than threshold No.1 board	
		20	Module 1 overtemperature on No.2 board	Temperature greater than threshold No.2 board	
		21	Module 2 overtemperature on No.2 board	Temperature greater than threshold No.2 board	
		22	Module 3 overtemperature on No.2 board	Temperature greater than threshold No.2 board	
		23	Module 4 overtemperature on No.2 board	Temperature greater than threshold No.2 board	
		24	Module 5 overtemperature on No.2 board	Temperature greater than threshold No.2 board	
		25	Module 6 overtemperature on No.2 board	Temperature greater than threshold No.2 board	
		26	Module 7 overtemperature on No.2 board	Temperature greater than threshold No.2 board	
		27	Module 8 overtemperature on No.2 board	Temperature greater than threshold No.2 board	
		28	Module 9 overtemperature on No.2 board	Temperature greater than threshold No.2 board	
		29	Multiple module overtemperature on No.2 board	Temperature greater than threshold No.2 board	
		30	Module 1 overtemperature on No.3 board	Temperature greater than threshold No.3 board	
		31	Module 2 overtemperature on No.3 board	Temperature greater than threshold No.3 board	
		32	Module 3 overtemperature on No.3 board	Temperature greater than threshold No.3 board	
		33	Module 4 overtemperature on No.3 board	Temperature greater than threshold No.3 board	
		34	Module 5 overtemperature on No.3 board	Temperature greater than threshold No.3 board	
		35	Module 6 overtemperature on No.3 board	Temperature greater than threshold No.3 board	
		36	Module 7 overtemperature on No.3 board	Temperature greater than threshold No.3 board	
		37	Module 8 overtemperature on No.3 board	Temperature greater than threshold No.3 board	
		38	Module 9 overtemperature on No.3 board	Temperature greater than threshold No.3 board	
		39	Multiple module overtemperature on No.3 board	Temperature greater than threshold No.3 board	
		40	Module 1 overtemperature on No.4 board	Temperature greater than threshold No.4 board	
		41	Module 2 overtemperature on No.4 board	Temperature greater than threshold No.4 board	
		42	Module 3 overtemperature on No.4 board	Temperature greater than threshold No.4 board	

		43	Module 4 overtemperature on No.4 board	Temperature greater than threshold No.4 board	
		44	Module 5 overtemperature on No.4 board	Temperature greater than threshold No.4 board	
		45	Module 6 overtemperature on No.4 board	Temperature greater than threshold No.4 board	
		46	Module 7 overtemperature on No.4 board	Temperature greater than threshold No.4 board	
		47	Module 8 overtemperature on No.4 board	Temperature greater than threshold No.4 board	
		48	Module 9 overtemperature on No.4 board	Temperature greater than threshold No.4 board	
		49	Multiple module overtemperature on No.4 board	Temperature greater than threshold No.4 board	
		50	Module 1 overtemperature on No.5 board	Temperature greater than threshold No.5 board	
		51	Module 2 overtemperature on No.5 board	Temperature greater than threshold No.5 board	
		52	Module 3 overtemperature on No.5 board	Temperature greater than threshold No.5 board	
		53	Module 4 overtemperature on No.5 board	Temperature greater than threshold No.5 board	
		54	Module 5 overtemperature on No.5 board	Temperature greater than threshold No.5 board	
		55	Module 6 overtemperature on No.5 board	Temperature greater than threshold No.5 board	
		56	Module 7 overtemperature on No.5 board	Temperature greater than threshold No.5 board	
		57	Module 8 overtemperature on No.5 board	Temperature greater than threshold No.5 board	
		58	Module 9 overtemperature on No.5 board	Temperature greater than threshold No.5 board	
		59	Multiple module overtemperature on No.5 board	Temperature greater than threshold No.5 board	
		60	Module 1 overtemperature on No.6 board	Temperature greater than threshold No.6 board	
		61	Module 2 overtemperature on No.6 board	Temperature greater than threshold No.6 board	
		62	Module 3 overtemperature on No.6 board	Temperature greater than threshold No.6 board	
		63	Module 4 overtemperature on No.6 board	Temperature greater than threshold No.6 board	
		64	Module 5 overtemperature on No.6 board	Temperature greater than threshold No.6 board	
		65	Module 6 overtemperature on No.6 board	Temperature greater than threshold No.6 board	
		66	Module 7 overtemperature on No.6 board	Temperature greater than threshold No.6 board	

		67	Module 8 overtemperature on No.6 board	Temperature greater than threshold No.6 board	
		68	Module 9 overtemperature on No.6 board	Temperature greater than threshold No.6 board	
		69	Multiple module overtemperature on No.6 board	Temperature greater than threshold No.6 board	
		70	Module 1 overtemperature on No.7 board	Temperature greater than threshold No.7 board	
		71	Module 2 overtemperature on No.7 board	Temperature greater than threshold No.7 board	
		72	Module 3 overtemperature on No.7 board	Temperature greater than threshold No.7 board	
		73	Module 4 overtemperature on No.7 board	Temperature greater than threshold No.7 board	
		74	Module 5 overtemperature on No.7 board	Temperature greater than threshold No.7 board	
		75	Module 6 overtemperature on No.7 board	Temperature greater than threshold No.7 board	
		76	Module 7 overtemperature on No.7 board	Temperature greater than threshold No.7 board	
		77	Module 8 overtemperature on No.7 board	Temperature greater than threshold No.7 board	
		78	Module 9 overtemperature on No.7 board	Temperature greater than threshold No.7 board	
		79	Multiple module overtemperature on No.7 board	Temperature greater than threshold No.7 board	
		80	Module 1 overtemperature on No.8 board	Temperature greater than threshold No.8 board	
		81	Module 2 overtemperature on No.8 board	Temperature greater than threshold No.8 board	
		82	Module 3 overtemperature on No.8 board	Temperature greater than threshold No.8 board	
		83	Module 4 overtemperature on No.8 board	Temperature greater than threshold No.8 board	
		84	Module 5 overtemperature on No.8 board	Temperature greater than threshold No.8 board	
		85	Module 6 overtemperature on No.8 board	Temperature greater than threshold No.8 board	
		86	Module 7 overtemperature on No.8 board	Temperature greater than threshold No.8 board	
		87	Module 8 overtemperature on No.8 board	Temperature greater than threshold No.8 board	
		88	Module 9 overtemperature on No.8 board	Temperature greater than threshold No.8 board	
		89	Multiple module overtemperature on No.8 board	Temperature greater than threshold No.8 board	
		90	Module 1 overtemperature on No.9 board	Temperature greater than threshold No.9 board	

		91	Module 2 overtemperature on No.9 board	Temperature greater than threshold No.9 board	
		92	Module 3 overtemperature on No.9 board	Temperature greater than threshold No.9 board	
		93	Module 4 overtemperature on No.9 board	Temperature greater than threshold No.9 board	
		94	Module 5 overtemperature on No.9 board	Temperature greater than threshold No.9 board	
		95	Module 6 overtemperature on No.9 board	Temperature greater than threshold No.9 board	
		96	Module 7 overtemperature on No.9 board	Temperature greater than threshold No.9 board	
		97	Module 8 overtemperature on No.9 board	Temperature greater than threshold No.9 board	
		98	Module 9 overtemperature on No.9 board	Temperature greater than threshold No.9 board	
		99	Multiple module overtemperature on No.9 board	Temperature greater than threshold No.9 board	
		100	Module 1 overtemperature on No.10 board	Temperature greater than threshold No.10 board	
		101	Module 2 overtemperature on No.10 board	Temperature greater than threshold No.10 board	
		102	Module 3 overtemperature on No.10 board	Temperature greater than threshold No.10 board	
		103	Module 4 overtemperature on No.10 board	Temperature greater than threshold No.10 board	
		104	Module 5 overtemperature on No.10 board	Temperature greater than threshold No.10 board	
		105	Module 6 overtemperature on No.10 board	Temperature greater than threshold No.10 board	
		106	Module 7 overtemperature on No.10 board	Temperature greater than threshold No.10 board	
		107	Module 8 overtemperature on No.10 board	Temperature greater than threshold No.10 board	
		108	Module 9 overtemperature on No.10 board	Temperature greater than threshold No.10 board	
		109	Multiple module overtemperature on No.10 board	Temperature greater than threshold No.10 board	
7	Wave-by-wave current limiting overrun	0	-	The number of wave-by-wave current limiting starts within a certain period of time is greater than the set value	1. Check if the acceleration and deceleration time is too short; 2. Check if there is a sudden load; 3. Check if there is a short circuit to the ground or between phases;

					4. Check if it starts when the motor is rotating.
8	Zero drift fault	0	U-phase zero drift failure	-	1. Check the Hall or current detection circuit; 2. Seek support from the manufacturer.
		1	V-phase zero drift failure	-	
		2	W-phase zero drift failure	-	
		10	U-phase zero drift failure on No.1 board	-	
		11	V-phase zero drift failure on No.1 board	-	
		12	W-phase zero drift failure on No.1 board	-	
		20	U-phase zero drift failure on No.2 board	-	
		21	V-phase zero drift failure on No.2 board	-	
		22	W-phase zero drift failure on No.2 board	-	
		30	U-phase zero drift failure on No.3 board	-	
		31	V-phase zero drift failure on No.3 board	-	
		32	W-phase zero drift failure on No.3 board	-	
		40	U-phase zero drift failure on No.4 board	-	
		41	V-phase zero drift failure on No.4 board	-	
		42	W-phase zero drift failure on No.4 board	-	
		50	U-phase zero drift failure on No.5 board	-	
		51	V-phase zero drift failure on No.5 board	-	
		52	W-phase zero drift failure on No.5 board	-	
		60	U-phase zero drift failure on No.6 board	-	
		61	V-phase zero drift failure on No.6 board	-	
		62	W-phase zero drift failure on No.6 board	-	
		70	U-phase zero drift failure on No.7 board	-	
		71	V-phase zero drift failure on No.7 board	-	
		72	W-phase zero drift failure on No.7 board	-	
		80	U-phase zero drift failure on No.8 board	-	
		81	V-phase zero drift failure on No.8 board	-	
		82	W-phase zero drift failure on No.8 board	-	
		90	U-phase zero drift failure on No.9 board	-	
		91	V-phase zero drift failure on No.9 board	-	
		92	W-phase zero drift failure on No.9 board	-	
		100	U-phase zero drift failure on No.10 board	-	
		101	V-phase zero drift failure on No.10 board	-	
		102	W-phase zero drift failure on No.10 board	-	
9	DC overvoltage fault	0	Hardware overvoltage	Hardware ODV signal triggered	1. Extend the deceleration time, increase the braking resistor circuit or use controllable rectifier to supply power when fault occurs during deceleration power generation
		1	Software overvoltage	Voltage AD above overvoltage threshold	
		2	Software overvoltage	Operating voltage above overvoltage point	
		10	Hardware overvoltage	Hardware ODV signal triggered	
		11	Software overvoltage	Voltage AD above overvoltage threshold	
		12	Software overvoltage	Operating voltage above overvoltage point	

					etc.; 2. Check the hardware; 3. Seek support from the manufacturer.
10	DC undervoltage fault	0	DC undervoltage fault	Voltage AD value below undervoltage threshold	1. Check the input voltage; 2. Enable the undervoltage suppression module.
		1	Undervoltage fault	Failure to suppress undervoltage when the undervoltage suppression module is on	
11	Drive overload	0	-	Drive continuous output current above threshold	Reduce load/replace with larger AC drive
12	Output phase loss	1	U/R phase loss	U/R phase current significantly lower than the other two phases in several current cycles	1. Check the output cable; 2. Check the drive.
		2	V/S phase loss	V/S phase current significantly lower than the other two phases in several current cycles	
		3	W/T phase loss	W/T phase current significantly lower than the other two phases in several current cycles	
		21	IAE U-phase loss	-	
		22	IAE V-phase loss	-	
		23	IAE W-phase loss	-	
13	Three-phase current imbalance	0	-	Non-0 current sum of three phase, and the deviation is too large	Check current sensor-related circuits.
17	Motor overheat	0	-	Motor temperature above the set threshold	1.Check the setting of the motor temperature detection type; 2. Lower the load; 3. Lower the ambient temperature.
18	Motor overload	0	-	Motor continuous output current above the threshold	Lower the load.
24	Input phase loss	0	Inverter input phase loss	Large fluctuations in bus voltage considered as input phase loss	-
		10	FAE rectifier input phase loss	Large RST voltage deviation	
25	AC overvoltage	0	-	One phase of the RST voltage above the AC overvoltage point	-
26	AC undervoltage	0	-	One phase of the RST voltage below the AC undervoltage point	-
27	Grid frequency	0	-	Grid frequency deviation above the set max.	-

	abnormality			deviation	
28	Voltage detection abnormality	0	Detection card dropout or enabling failure	Detection card dropout or enabling failure	1. Check the voltage detection card; 2. Check the grid voltage; 3. Seek support from the manufacturer.
		1	R-phase detection abnormality	Voltage detection card dropout or abnormality during operation	
		2	S-phase detection abnormality	Abnormal zero drift of the voltage detection	
		3	RS detection abnormality	Abnormal zero drift of the voltage detection	
		4	T-phase detection abnormality	Abnormal zero drift of the voltage detection	
		5	RT detection abnormality	Abnormal zero drift of the voltage detection	
		6	ST detection abnormality	Abnormal zero drift of the voltage detection	
		7	RST detection abnormality	Abnormal zero drift of the voltage detection	
30	Contactor abnormality detected	0	Power-up timeout		Seek support from the manufacturer
		1	Buffer contactor abnormality detected	Buffer contactor abnormality detected	
		2	Main contactor abnormality detected	Main contactor abnormality detected	
32	Drive communication abnormality	0	Drive board synchronization failure	-	1. Check communication connection; 2. Seek support from the manufacturer.
		10	Synchronization failure of No.1 board	-	
		20	Synchronization failure of No.2 board	-	
		30	Synchronization failure of No.3 board	-	
		40	Synchronization failure of No.4 board	-	
		50	Synchronization failure of No.5 board	-	
		60	Synchronization failure of No.6 board	-	
33	Parallel fault	0	Large parallel unit current deviation	-	Seek support from the manufacturer.
		1	Parallel bus voltage detection abnormality	-	
35	Master controller communication abnormality	0	Drive disconnection	-	Seek support from the manufacturer.
		1	Abnormal communication between main control board and drive board	-	
		2	Internal communication abnormality of the main control board	-	
		3	Wrong sub-device communication logic	-	
		4	Zero-drift data interaction abnormality	-	
		5	PWM configuration failure	-	
		6	Arm load timeout	-	
		7	Fault record reading timeout 1	-	
		8	Fault record reading timeout 2	-	
36	Module temperature detection dropout	0	-	-	1. Check the temperature circuit; 2. Seek support from the manufacturer.
37	Drive board locking PWM output	0	Failure of sealing wave on drive board	-	Seek support from the manufacturer.
		10	Failure of locking PWM output on No.1 board	-	
		20	Failure of locking PWM output on No.2 board	-	
		30	Failure of locking PWM output on No.3	-	

			board		
		40	Failure of locking PWM output on No.4 board	-	
		50	Failure of locking PWM output on No.5 board	-	
		60	Failure of locking PWM output on No.6 board	-	
38	STO fault	0	Hardware fault	-	1. Check if STO is on; 2. Seek support from the manufacturer.
		1	Hardware fault	-	
		2	Hardware fault	-	
		3	Hardware fault	-	
		4	Hardware fault	-	
		5	Hardware fault	-	
		6	Hardware fault	-	
		7	Hardware fault	-	
		8	Power failure	-	
		9	Power failure	-	
		10	Power failure	-	
		11	Safety torque off	-	
		12	MCU fault	-	
		13	MCU fault	-	
		14	MCU fault	-	
		15	MCU fault	-	
		16	Power failure	-	
		17	MCU fault	-	
		20	STO fault on No.2 board	-	
40	LV-side overvoltage	0	-	LV-side output voltage greater than LV-side overvoltage setting value	1. Check if the overvoltage set value on the LV side is too small 2. Seek support from the manufacturer.
42	LV-side overcurrent	0	-	LV-side output current greater than LV-side overcurrent setting value	1. Check if the overcurrent set value on the LV side is too small 2. Seek support from the manufacturer.
47	PWM configuration abnormality	0	-	-	Seek support from the manufacturer.
48	Short circuit to ground	0	-	-	Seek support from the manufacturer.
51	Parameter setting	0	Parameter setting fault	-	Seek support

	fault	51	Rx parameter setting fault	-	from the manufacturer.
		52	Lx parameter setting fault	-	
53	-	0	Other faults	-	Seek support from the manufacturer.
		1	Current above limit	Output pulse width exceeds motor rating on reaching lower limit (<10us)	
		5	CBC during IAE	CBC hardware current limit is triggered during IAE	
58	Communication fault	0	Common 485 port disconnection	-	Seek support from the manufacturer.
		1	High-speed 485 port disconnection	-	
		3	Modbus card communication disconnection	-	
		11	Internal master-slave communication parity failure	-	
		12	Internal master-slave communication handshake failure	-	
		21	DP card fault	-	
		22	PN master disconnection	-	
		23	EtherCAT master disconnection	-	
		24	CAN master disconnection	-	
60	Drive board abnormality	0	Abnormal online status of the board	-	Seek support from the manufacturer.
		1	Board is offline when enabling	-	
		2	Inconsistent software version to enable the drive board	-	
		3	Wrong board model	-	
61	Expansion card abnormality	0	EXIO1 enable error	Disconnection or communication abnormality occur after the card is enabled	1. Check whether the corresponding expansion card is loose, please try to re-plug it; 2. Check the manual of the expansion card and troubleshoot the problem according to the indicator light; 3. Seek support from the manufacturer.
		1	EXIO1 enable conflict	Disconnection or communication abnormality occur after the card is enabled	
		2	EXIO2 enable error	Disconnection or communication abnormality occur after the card is enabled	
		3	EXIO2 enable conflict	Disconnection or communication abnormality occur after the card is enabled	
		4	EXIO3 enable error	Disconnection or communication abnormality occur after the card is enabled	
		5	EXIO3 enable conflict	Disconnection or communication abnormality occur after the card is enabled	
		6	EXSVM enable error	Disconnection or communication abnormality occur after the card is enabled	
		20	EXDP enable error	Disconnection or communication abnormality occur after the card is enabled	
		30	EXMB enable error	Disconnection or communication abnormality occur after the card is enabled	
		40	PN card enable error	Disconnection or communication abnormality occur after the card is enabled	
		42	CAN card enable error	Disconnection or communication abnormality occur after the card is enabled	
		50	EtherCAT card enable error	Disconnection or communication	

				abnormality occur after the card is enabled	
62	Reading/writing function code error	1	Master eeprom write error	Error in reading/writing corresponding board eeprom	Seek support from the manufacturer
		2	Master eeprom read error	Error in reading/writing corresponding board eeprom	
		3	Master eeprom read and write error	Error in reading/writing corresponding board eeprom	
		4	Number of master eeprom write function codes above range	Error in reading/writing corresponding board eeprom	
		5	Reset failure during master eeprom initialization	Error in reading/writing corresponding board eeprom	
63	Parameter copy abnormality	0	-	-	Seek support from the manufacturer
65	Firmware upgrade fault	1	Master CU1 upgrade failure	Software upgrade failure	Seek support from the manufacturer
		11	Master CU2 upgrade failure	Software upgrade failure	
		21	Parallel board upgrade failure	Software upgrade failure	
		31	Drive board upgrade failure	Software upgrade failure	
66	CPU overload	1	Main loop timeout	-	Seek support from the manufacturer
		2	1ms interrupt timeout	-	
		3	AD interrupt timeout	-	
		5	Stack overflow	-	
74	Current control abnormality	10	-	The actual value of the current deviates too much from the set value	Seek support from the manufacturer
75	Load protection	1	Load protection 1	See F10.32 to F10.36	Seek support from the manufacturer
		2	Load protection 2	See F10.32 to F10.36	
118	Monitor comparator output 1 fault	0	-	See F06.50~54	Seek support from the manufacturer
119	Monitor comparator output 2 fault	0	-	See F06.55~59	Seek support from the manufacturer
125	External fault 1	1	-	See external terminal setting description	Seek support from the manufacturer
126	External fault 2	1	-	See external terminal setting description	Seek support from the manufacturer
127	External fault 3	1	-	See external terminal setting description	Seek support from the manufacturer
128	Outage undervoltage	0	-	Reserved for undervoltage status display	-
129	Outage overvoltage	0	-	Overvoltage warning in inverter shutdown without DC chopper unit	-
130	Input phase loss	0	-	Inverter input phase loss due to excessive bus	-

				voltage fluctuations	
131	AC drive overload warning	0	-	See AC drive overload description	-
132	Master eeprom storage warning	0	-	-	-
133	Excessive speed deviation	0	-	-	-
135	GPRS lockout warning	0	-	-	-
136	GPRS disconnection	0	-	-	-
137	Modbus communication disconnection warning	0	-	-	-
138	Load protection 1	0	-	See F10.32~34 for details	-
139	Load protection 2	0	-	See F10.32, F10.35, F10.36 for details	-
140	Expansion card disconnection warning	0	-	-	-
141	AC drive overheat warning	0	-	Set AC drive overheating warning threshold percentage via F10.25 relative to the inverter overheating failure point (default 105 degrees * 80% = 84 degrees)	-
143	Running warning 1	0	-	Command conflict 1	-
144	Running warning 2	0	-	Command conflict 2	-
145	Running warning 3	0	-	Command conflict 3	-
146	Comparator 1 warning	0	-	-	-
147	Comparator 2 warning	0	-	-	-
165	Phase-lock timeout	0	-	-	-
166	Expansion card setting error	0	-	-	-
168	Model selection warning	0	-	-	-
169	PN master disconnection	0	-	-	-
170	EtherCAT master disconnection	0	-	-	-
171	CAN master disconnection	0	-	-	-